SCHNEIDER
MESSTECHNIK

In-line diaphragm seal with sterile connection NEUMO BioConnect® Model 981.50

WIKA data sheet DS 98.50

for further approvals, see page 5

Applications

- Food and beverage industry
- Pharmaceutical industry, biotechnology industry, production of active ingredients
- Production of aseptic basic materials in the chemical industry

Special features

- Dead-space free installation in pipes
- Self-draining in all mounting positions
- Quick cleaning, without residue
- Suitable for SIP and CIP
- EHEDG-certified and 3-A-compliant

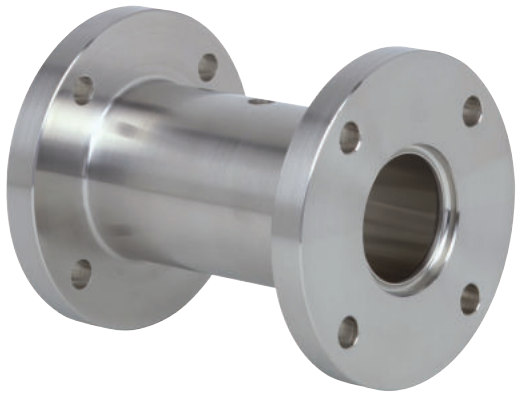

In-line diaphragm seal, model 981.50

Description

Diaphragm seals are used for the protection of pressure measuring instruments in applications with difficult media. In diaphragm seal systems, the diaphragm of the diaphragm seal effects the separation of the instrument and the medium. The pressure is transmitted to the measuring instrument via the system fill fluid which is inside the diaphragm seal system.

For the implementation of demanding customer applications, there is a wide variety of designs, materials and system fill fluids available.

For further technical information on diaphragm seals and diaphragm seal systems see IN 00.06 “Application, operating principle, designs”.

The model 981.50 is ideally suited to fulfil the high requirements of sanitary applications. It can be optimally integrated into pipelines via the BioConnect® fittings, fulfils all hygienic design requirements and is EHEDG-certified.

The diaphragm seal systems can withstand the cleaning vapour temperatures occurring in the SIP processes and thus ensure a sterile connection between the medium to be measured and the diaphragm seal.

Mounting of the diaphragm seal to the measuring instruments may be made via a direct connection, for high temperatures via a cooling element or via a flexible capillary.

The availability of the diaphragm seals for common pipe standards and nominal widths simplifies integration into already existing pipe cross-sections.

ICS Schneider Messtechnik GmbH
Briesestraße 59
D-16562 Hohen Neuendorf / OT Bergfelde

Tel.: 03303 / 504066
Fax: 03303 / 504068

info@ics-schneider.de
www.ics-schneider.de

Installation example

Model 981.50 with NEUMO BioConnect®, flange form R directly mounted to model S-20 pressure sensor

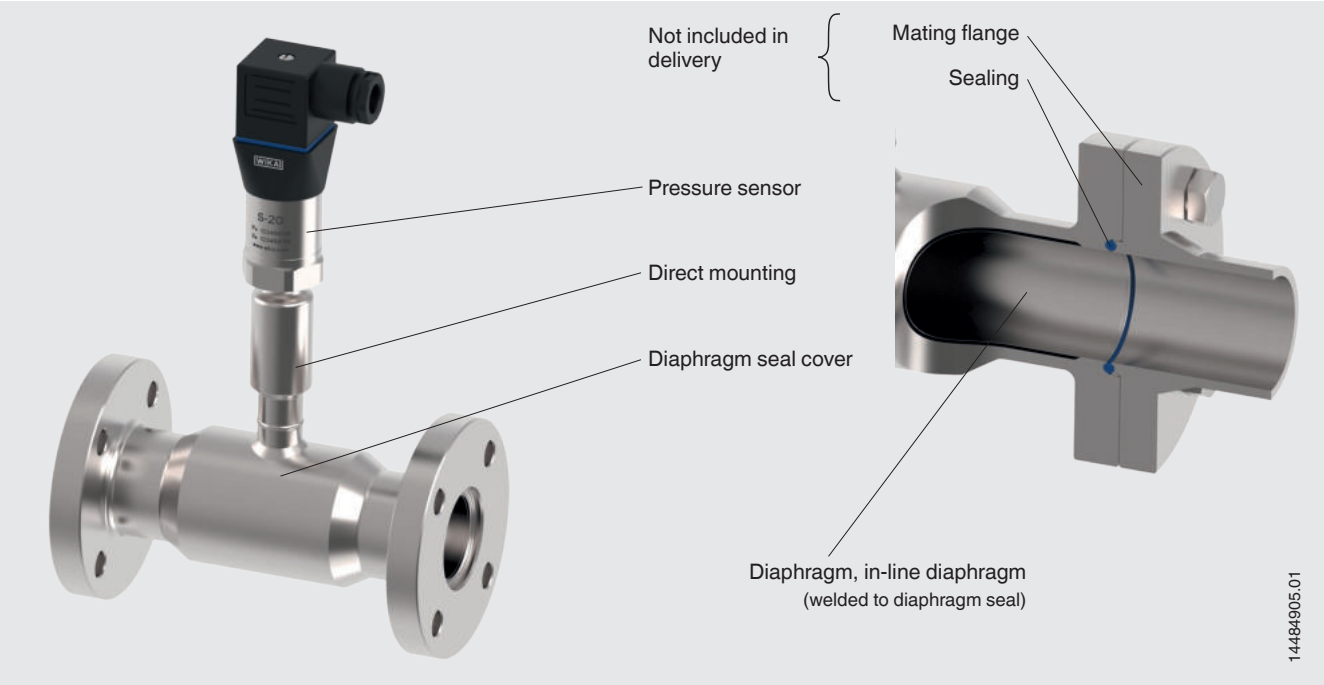

Specifications

Basic information	
Version	In-line diaphragm seal
Pressure range [1]	0 ... 0.6 bar to 0 ... 40 bar [0 ... 8.7 psi to 0 ... 580 psi] or all other equivalent vacuum or combined pressure and vacuum ranges
Connection to the measuring instrument	■ Axial gauge adapter for weld seam ■ Axial gauge adapter with female thread (e.g. G ½, G ¼, ½ NPT or ¼ NPT)
Mounting type	■ Direct mounting ■ Capillary ■ Cooling element
Level of cleanliness of wetted parts	■ Oil- and grease-free per ASTM G93-03 level F (< 1,000 mg/m^2) ■ Oil- and grease-free per ASTM G93-03 level D and ISO 15001 (< 220 mg/m^2) ■ Oil- and grease-free per ASTM G93-03 level C and ISO 15001 (< 66 mg/m^2)
Origin of wetted parts	■ International ■ EU, CH, USA
Surface roughness of wetted parts	■ Ra ≤ 0.76 µm [30 µin] per ASME BPE SF3 (except for weld seam) ■ Ra ≤ 0.38 µm [15 µin] per ASME BPE SF4, only with electropolished surface (except for weld seam)
Vacuum service (see IN 00.25)	■ Basic service ■ Advanced service ■ Premium service
	→ For information on the “Diaphragm seal systems for vacuum processes”, see Technical information IN 00.25.

1) The maximum pressure range depends on the selection of the process connection. See PN nominal pressure in the tables from page 6.

Process connection	
Standard	
NEUMO BioConnect®, flange form V	■ Pipe standard per DIN 11866 row A or DIN 11850 row 2 ■ Pipe standard per DIN 11866 row B or DIN ISO 1127 row 1
NEUMO BioConnect®, flange form R	■ Pipe standard per DIN 11866 row A or DIN 11850 row 2 ■ Pipe standard per DIN 11866 row B or DIN ISO 1127 row 1
NEUMO BioConnect®, threaded connection with threaded coupling	■ Pipe standard per DIN 11866 row A or DIN 11850 row 2 ■ Pipe standard per DIN 11866 row B or DIN ISO 1127 row 1
NEUMO BioConnect®, threaded connection with liner and union nut	■ Pipe standard per DIN 11866 row A or DIN 11850 row 2 ■ Pipe standard per DIN 11866 row B or DIN ISO 1127 row 1

Other process connections on request

Material	
Material (wetted) [1]	
Diaphragm	■ Stainless steel 1.4435 (316L) ■ Stainless steel 1.4435 (316L), electropolished [2]
	The material of the diaphragm and the diaphragm seal cover must be identical
Material (in contact with the environment)	
Diaphragm seal cover	■ Stainless steel 1.4435 (316L) ■ Stainless steel 1.4435 (316L), electropolished [2]

1) Marking of the parts with the material code guarantees 100 % material traceability
2) Only in connection with a surface roughness of Ra ≤ 0.38 µm [15 µin] for the wetted parts

Further materials for special process temperatures on request.

Instrument labelling	
Marking of the diaphragm seal	■ Without ■ Per valid 3-A standard

Mounting variants for pressure gauges

For horizontal pipelines

Variant 1

- Connection: Lower mount
- Pointer shaft: Crosswise to flow direction
- Mounting: Direct mounting, horizontal pipeline

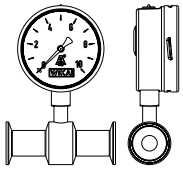

Variant 2

- Connection: Lower mount
- Pointer shaft: Parallel to flow direction
- Mounting: Direct mounting, horizontal pipeline

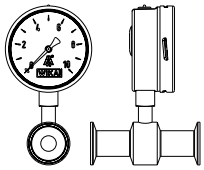

Variant 3

- Connection: Lower back mount
- Pointer shaft: Crosswise to flow direction
- Mounting: Direct mounting, horizontal pipeline

Variant 4

- Connection: “At 12 o'clock”
- Pointer shaft: Crosswise to flow direction
- Mounting: Direct mounting, horizontal pipeline

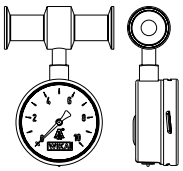

For vertical pipelines

Variant 1

- Connection: “At 3 o'clock”
- Pointer shaft: Crosswise to flow direction
- Mounting: Direct mounting, vertical pipeline

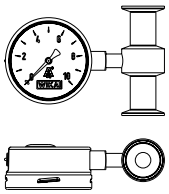

Variant 2

- Connection: “At 9 o'clock”
- Pointer shaft: Crosswise to flow direction
- Mounting: Direct mounting, vertical pipeline

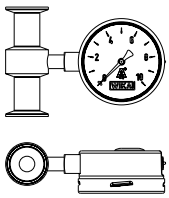

Variant 3

- Connection: Lower back mount
- Pointer shaft: Crosswise to flow direction
- Mounting: Direct mounting, vertical pipeline

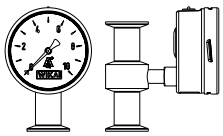

Approvals

Logo	Description	Country
CE	**EU declaration of conformity** Pressure equipment directive	European Union
3-A	**3-A** Sanitary Standard	USA
EHEDG	**EHEDG** [1)] Hygienic Equipment Design	European Union
-	**CRN** Safety (e.g. electr. safety, overpressure, ...)	Canada

1) EHEDG conformity only in combination with ASEPTO-STAR k-flex upgrade, sealing from Kieselmann GmbH.

Optional approvals

Logo	Description	Country
-	**MTSCHS** Permission for commissioning	Kazakhstan

Certificates (option)

Certificates	
Certificates	■ 2.2 test report per EN 10204 - State-of-the-art manufacturing, material proof, indication accuracy for diaphragm seal systems - FDA conformity of the system fill fluid - 3-A conformity of the diaphragm seal, based on a third party verification - Manufacturer‘s declaration for food contact materials per regulation (EC) no. 1935/2004 ■ 3.1 inspection certificate per EN 10204 - Material proof, wetted metal parts - Indication accuracy for diaphragm seal systems ■ Manufacturer‘s declaration for food contact materials per regulation (EC) no. 1935/2004

→ For approvals and certificates, see website

Dimensions in mm [in]

Process connection: NEUMO BioConnect®, flange form V

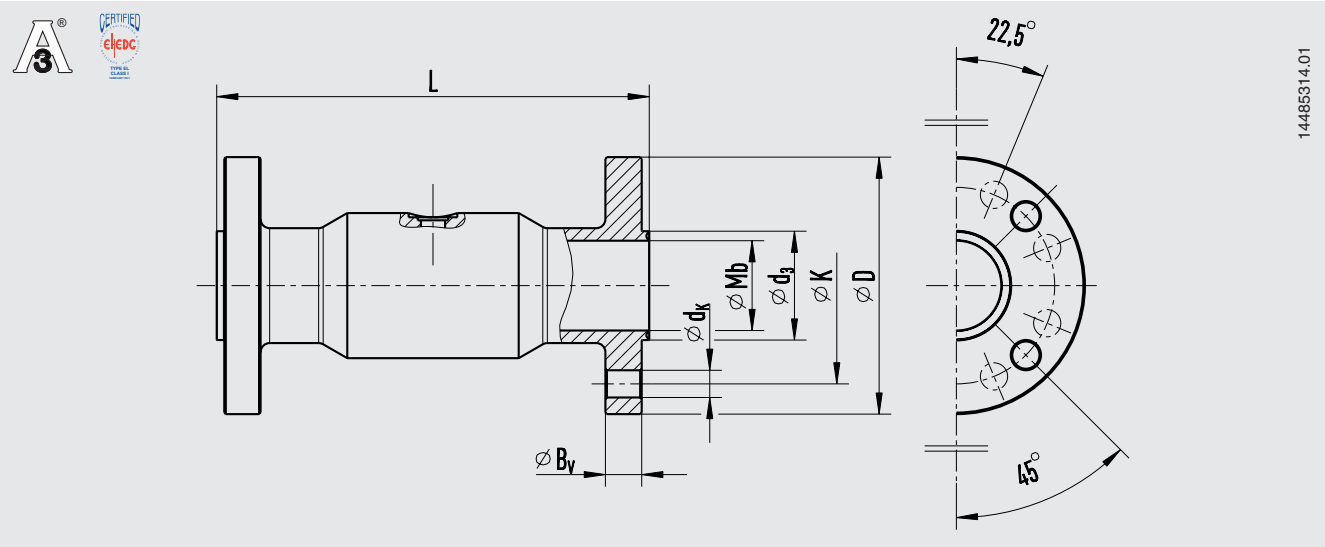

Pipe standard per DIN 11866 row A or DIN 11850 row 2

DN	PN	Dimensions in mm [in]							Weight in kg [lb]
		Mb	D	L	B_V	K	d_K	d_3	
10	16	14 [0.551]	65 [2.559]	128 [5.039]	8 [0.315]	45 [1.772]	4 x Ø 9 [0.354]	19.2 [0.756]	1.1 [2.43]
15	16	16 [0.63]	75 [2.953]	128 [5.039]	8 [0.315]	55 [2.165]	4 x Ø 9 [0.354]	21.2 [0.835]	1.3 [2.87]
20	16	20 [0.787]	80 [3.15]	138 [5.433]	10 [0.394]	60 [2.362]	4 x Ø 9 [0.354]	25.2 [0.992]	1.4 [3.09]
25	16	26 [1.024]	85 [3.346]	138 [5.433]	10 [0.394]	65 [2.559]	4 x Ø 9 [0.354]	32.2 [1.268]	1.5 [3.31]
32	16	32 [1.26]	95 [3.74]	138 [5.433]	10 [0.394]	75 [2.953]	4 x Ø 9 [0.354]	38.2 [1.504]	1.8 [3.97]
40	16	38 [1.496]	100 [3.937]	160 [6.299]	10 [0.394]	80 [3.15]	4 x Ø 9 [0.354]	44.2 [1.74]	2.6 [5.73]
50	16	50 [1.969]	110 [4.331]	160 [6.299]	12 [0.472]	90 [3.543]	4 x Ø 9 [0.354]	56.2 [2.213]	3.2 [7.05]
65	16	66 [2.598]	140 [5.512]	160 [6.299]	14 [0.551]	115 [4.528]	4 x Ø 11 [0.433]	72.2 [2.843]	4.7 [10.36]
80	16	81 [3.19]	150 [5.906]	160 [6.299]	14 [0.551]	125 [4.921]	8 x Ø 11 [0.433]	87.2 [3.433]	5.9 [13.01]
100	16	100 [3.937]	175 [6.89]	160 [6.299]	16 [0.63]	150 [5.906]	8 x Ø 11 [0.433]	106.2 [4.181]	7.8 [17.2]

Pipe standard per DIN 11866 row B or DIN ISO 1127 row 1

DN	PN	Dimensions in mm [in]							Weight in kg [lb]
		Mb	D	L	B_V	K	d_K	d_3	
17.2	16	14 [0.551]	65 [2.559]	128 [5.039]	8 [0.315]	45 [1.772]	4 x Ø 9 [0.354]	19.2 [0.756]	1.1 [2.43]
21.3	16	18 [0.709]	75 [2.953]	138 [5.433]	8 [0.315]	55 [2.165]	4 x Ø 9 [0.354]	23.3 [0.917]	1.3 [2.87]
26.9	16	23.6 [0.929]	80 [3.15]	138 [5.433]	10 [0.394]	60 [2.362]	4 x Ø 9 [0.354]	28.9 [1.138]	1.4 [3.09]
33.7	16	29.6 [1.165]	85 [3.346]	138 [5.433]	10 [0.394]	65 [2.559]	4 x Ø 9 [0.354]	35.9 [1.413]	1.5 [3.31]
42.4	16	38.3 [1.508]	95 [3.74]	138 [5.433]	10 [0.394]	75 [2.953]	4 x Ø 9 [0.354]	44.6 [1.756]	1.7 [3.75]
48.3	16	44.3 [1.744]	100 [3.937]	160 [6.299]	10 [0.394]	80 [3.15]	4 x Ø 9 [0.354]	50.5 [1.988]	2.1 [4.63]
60.3	16	56.1 [2.209]	110 [4.331]	160 [6.299]	12 [0.472]	90 [3.543]	4 x Ø 9 [0.354]	62.5 [2.461]	3.0 [6.61]
76.1	16	71.3 [2.807]	140 [5.512]	160 [6.299]	14 [0.551]	115 [4.528]	4 x Ø 11 [0.433]	77.7 [3.059]	4.7 [10.36]
88.9	16	84.1 [3.311]	150 [5.906]	160 [6.299]	14 [0.551]	125 [4.921]	8 x Ø 11 [0.433]	90.5 [3.563]	5.3 [11.68]
114.3	16	109.1 [4.295]	175 [6.89]	160 [6.299]	16 [0.63]	150 [5.906]	8 x Ø 11 [0.433]	115.3 [4.539]	7.0 [15.43]

Process connection: NEUMO BioConnect®, flange form R

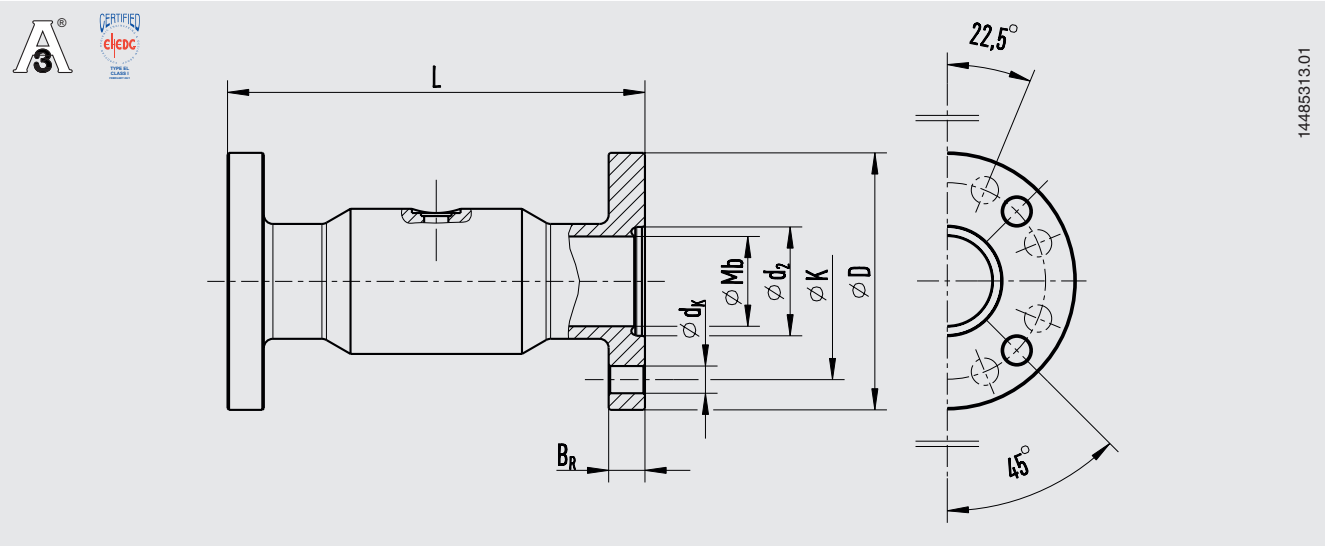

Pipe standard per DIN 11866 row A or DIN 11850 row 2

DN	PN	Dimensions in mm [in]							Weight in kg [lb]
		Mb	D	L	B_R	K	d_K	d_2	
10	16	14 [0.551]	65 [2.559]	128 [5.039]	10 [0.394]	45 [1.772]	4 x Ø 9 [0.354]	19.3 [0.76]	1.1 [2.43]
15	16	16 [0.63]	75 [2.953]	128 [5.039]	10 [0.394]	55 [2.165]	4 x Ø 9 [0.354]	21.3 [0.839]	1.3 [2.87]
20	16	20 [0.787]	80 [3.15]	138 [5.433]	12 [0.472]	60 [2.362]	4 x Ø 9 [0.354]	25.3 [0.996]	1.4 [3.09]
25	16	26 [1.024]	85 [3.346]	138 [5.433]	12 [0.472]	65 [2.559]	4 x Ø 9 [0.354]	32.3 [1.272]	1.5 [3.31]
32	16	32 [1.26]	95 [3.74]	138 [5.433]	12 [0.472]	75 [2.953]	4 x Ø 9 [0.354]	38.3 [1.508]	1.8 [3.97]
40	16	38 [1.496]	100 [3.937]	166 [6.535]	12 [0.472]	80 [3.15]	4 x Ø 9 [0.354]	44.3 [1.744]	2.6 [5.73]
50	16	50 [1.969]	110 [4.331]	166 [6.535]	14 [0.551]	90 [3.543]	4 x Ø 9 [0.354]	56.3 [2.217]	3.2 [7.05]
65	16	66 [2.598]	140 [5.512]	166 [6.535]	16 [0.63]	115 [4.528]	4 x Ø 11 [0.433]	72.3 [2.846]	4.7 [10.36]
80	16	81 [3.19]	150 [5.906]	166 [6.535]	16 [0.63]	125 [4.921]	8 x Ø 11 [0.433]	87.3 [3.437]	5.9 [13.01]
100	16	100 [3.937]	175 [6.89]	166 [6.535]	18 [0.709]	150 [5.906]	8 x Ø 11 [0.433]	106.3 [4.185]	7.8 [17.2]

Pipe standard per DIN 11866 row B or DIN ISO 1127 row 1

DN	PN	Dimensions in mm [in]							Weight in kg [lb]
		Mb	D	L	B_R	K	d_K	d_2	
17.2	16	14 [0.551]	65 [2.559]	128 [5.039]	10 [0.394]	45 [1.772]	4 x Ø 9 [0.354]	19.3 [0.76]	1.1 [2.43]
21.3	16	18 [0.709]	75 [2.953]	138 [5.433]	10 [0.394]	55 [2.165]	4 x Ø 9 [0.354]	23.4 [0.921]	1.3 [2.87]
26.9	16	23.6 [0.929]	80 [3.15]	138 [5.433]	12 [0.472]	60 [2.362]	4 x Ø 9 [0.354]	29 [1.142]	1.4 [3.09]
33.7	16	29.6 [1.165]	85 [3.346]	138 [5.433]	12 [0.472]	65 [2.559]	4 x Ø 9 [0.354]	36 [1.417]	1.5 [3.31]
42.4	16	38.3 [1.508]	95 [3.74]	138 [5.433]	12 [0.472]	75 [2.953]	4 x Ø 9 [0.354]	44.7 [1.76]	1.7 [3.75]
48.3	16	44.3 [1.744]	100 [3.937]	166 [6.535]	12 [0.472]	80 [3.15]	4 x Ø 9 [0.354]	50.6 [1.992]	2.1 [4.63]
60.3	16	56.1 [2.209]	110 [4.331]	166 [6.535]	14 [0.551]	90 [3.543]	4 x Ø 9 [0.354]	62.6 [2.465]	3.0 [6.61]
76.1	16	71.3 [2.807]	140 [5.512]	166 [6.535]	16 [0.63]	115 [4.528]	4 x Ø 11 [0.433]	77.8 [3.063]	4.7 [10.36]
88.9	16	84.1 [3.311]	150 [5.906]	166 [6.535]	16 [0.63]	125 [4.921]	8 x Ø 11 [0.433]	90.6 [3.567]	5.3 [11.68]
114.3	16	109.1 [4.295]	175 [6.89]	166 [6.535]	18 [0.709]	150 [5.906]	8 x Ø 11 [0.433]	115.4 [4.543]	7.0 [15.43]

Process connection: NEUMO BioConnect®, threaded connection with threaded coupling

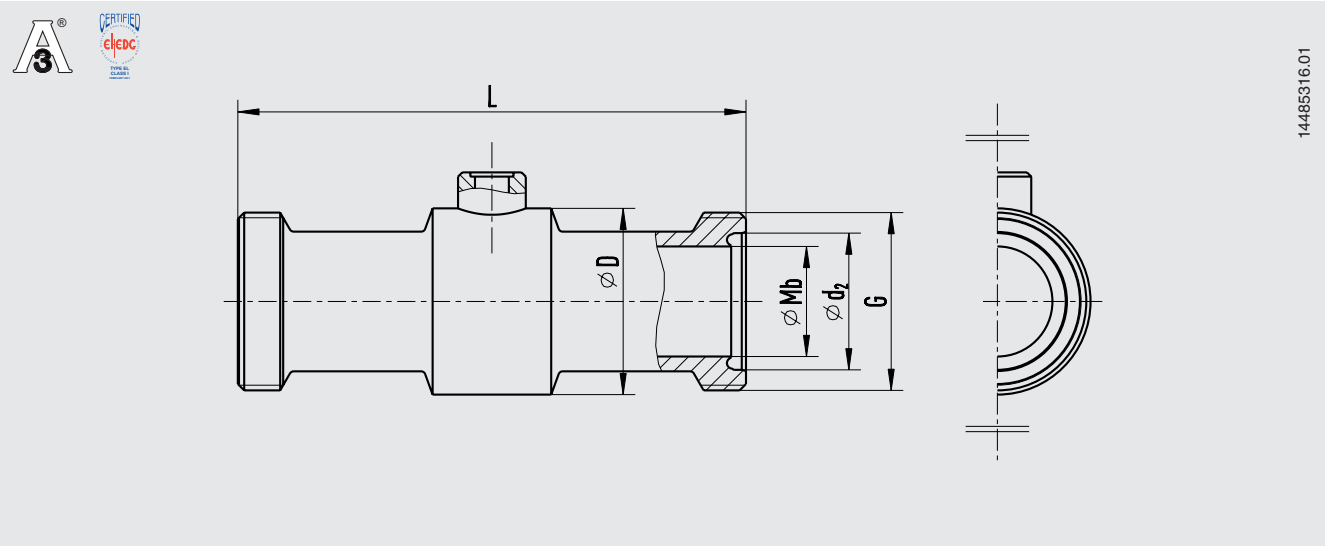

Pipe standard per DIN 11866 row A or DIN 11850 row 2

DN	PN	Dimensions in mm [in]					Weight in kg [lb]
		Mb	D	L	G	d_2	
15	16	16 [0.63]	34 [1.339]	128 [5.039]	M30 x 1.5	-	0.4 [0.88]
20	16	20 [0.787]	38 [1.496]	138 [5.433]	M36 x 2	25.3 [0.996]	0.5 [1.1]
25	16	26 [1.024]	44 [1.732]	138 [5.433]	M42 x 2	32.3 [1.272]	0.6 [1.32]
32	16	32 [1.26]	52 [2.047]	138 [5.433]	M52 x 2	-	1.1 [2.43]
40	16	38 [1.496]	56 [2.205]	166 [6.535]	M56 x 2	44.3 [1.744]	1.3 [2.87]
50	16	50 [1.969]	68 [2.677]	166 [6.535]	M68 x 2	56.3 [2.217]	1.6 [3.53]
65	16	68 [2.677]	90 [3.543]	166 [6.535]	M90 x 3	-	2.5 [5.51]
80	16	81 [3.189]	100 [3.937]	166 [6.535]	M100 x 3	-	2.7 [5.95]
100	16	100 [3.937]	130 [5.118]	166 [6.535]	M130 x 4	-	6.0 [13.23]

Pipe standard per DIN 11866 row B or DIN ISO 1127 row 1

DN	PN	Dimensions in mm [in]					Weight in kg [lb]
		Mb	D	L	G	d_2	
21.3	16	18 [0.709]	38 [1.496]	138 [5.433]	M30 x 1.5	-	0.3 [0.66]
26.9	16	23.6 [0.929]	42 [1.654]	138 [5.433]	M36 x 2	29 [1.142]	0.4 [0.88]
33.7	16	29.6 [1.165]	44 [1.732]	138 [5.433]	M42 x 2	36 [1.417]	0.5 [1.1]
42.4	16	38.3 [1.508]	58 [2.283]	138 [5.433]	M52 x 2	-	0.7 [1.54]
48.3	16	44.3 [1.744]	62 [2.441]	166 [6.535]	M56 x 2	50.6 [1.992]	0.8 [1.76]
60.3	16	56.1 [2.209]	74 [2.913]	166 [6.535]	M68 x 2	62.6 [2.465]	0.9 [1.98]
76.1	16	71.3 [2.807]	90 [3.543]	166 [6.535]	M90 x 3	-	2.0 [4.41]
88.9	16	84.1 [3.311]	100 [3.937]	166 [6.535]	M100 x 3	-	2.2 [4.85]
114.3	16	109.1 [4.295]	130 [5.118]	166 [6.535]	M130 x 4	-	4.0 [8.82]

Process connection: NEUMO BioConnect®, threaded connection with liner and union nut

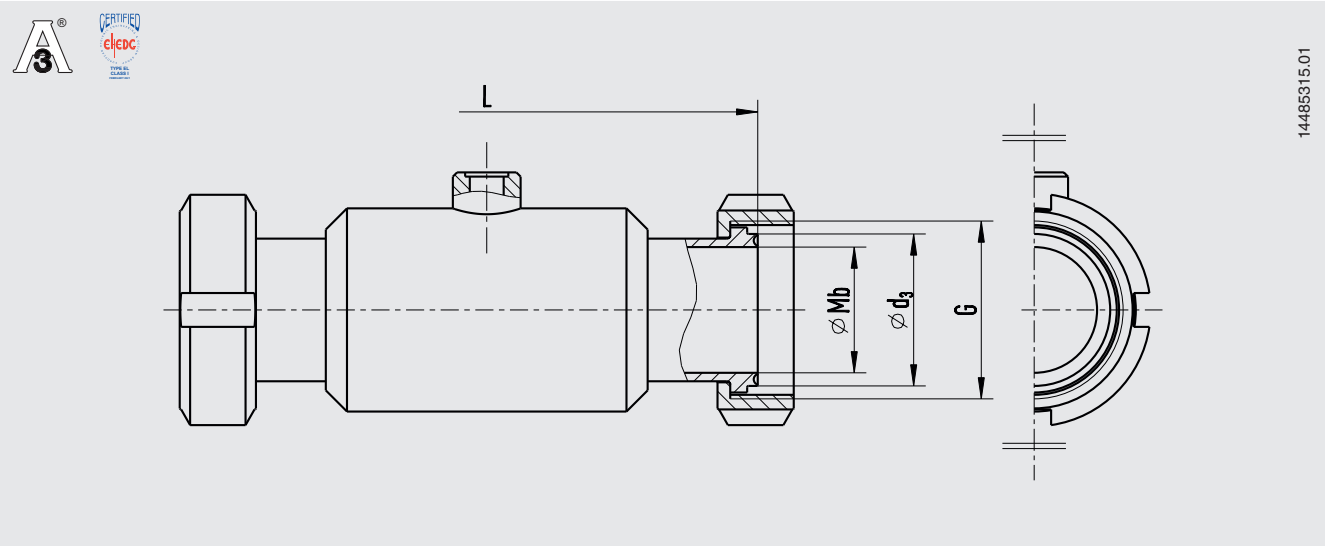

Pipe standard per DIN 11866 row A or DIN 11850 row 2

DN	PN	Dimensions in mm [in]				Weight in kg [lb]
		Mb	L	G	d_3	
15	16	16 [0.63]	128 [5.039]	M30 x 1.5	-	0.7 [1.54]
20	16	20 [0.787]	138 [5.433]	M36 x 2	25.2 [0.992]	0.8 [1.76]
25	16	26 [1.024]	138 [5.433]	M42 x 2	32.2 [1.268]	0.9 [1.98]
32	16	32 [1.26]	138 [5.433]	M52 x 2	-	1.4 [3.09]
40	16	38 [1.496]	160 [6.299]	M56 x 2	44.2 [1.740]	1.6 [3.53]
50	16	50 [1.969]	160 [6.299]	M68 x 2	56.2 [2.213]	1.9 [4.19]
65	16	68 [2.677]	160 [6.299]	M90 x 3	-	2.8 [6.17]
80	16	81 [3.189]	160 [6.299]	M100 x 3	-	3 [6.61]
100	16	100 [3.937]	160 [6.299]	M130 x 4	-	6.3 [13.89]

Pipe standard per DIN 11866 row B or DIN ISO 1127 row 1

DN	PN	Dimensions in mm [in]				Weight in kg [lb]
		Mb	L	G	d_3	
21.3	16	18 [0.709]	138 [5.433]	M30 x 1.5	-	0.6 [1.32]
26.9	16	23.6 [0.929]	138 [5.433]	M36 x 2	28.9 [1.138]	0.7 [1.54]
33.7	16	29.6 [1.165]	138 [5.433]	M42 x 2	35.9 [1.413]	0.8 [1.76]
42.4	16	38.3 [1.508]	138 [5.433]	M52 x 2	-	1 [2.2]
48.3	16	44.3 [1.744]	160 [6.299]	M56 x 2	50.5 [1.988]	1.1 [2.43]
60.3	16	56.1 [2.209]	160 [6.299]	M68 x 2	62.5 [2.461]	1.2 [2.65]
76.1	16	71.3 [2.807]	160 [6.299]	M90 x 3	-	2.3 [5.07]
88.9	16	84.1 [3.311]	160 [6.299]	M100 x 3	-	2.5 [5.51]
114.3	16	109.1 [4.295]	160 [6.299]	M130 x 4	-	4.3 [9.48]