1496 & 1498

$^{1}/_{16}$ & $^{1}/_{8}$ DIN Industrial Controller

User Manual

ICS Schneider Messtechnik GmbH
Briesestraße 59
D-16562 Hohen Neuendorf / OT Bergfelde

Tel.: 03303 / 50 40 66
Fax.: 03303 / 50 40 68

info@ics-schneider.de
www.ics-schneider.de

DYNISCO 1496/1498 Temperature Controller QUICK START CARD

This guide is intended to provide basic information on setting up the Dynisco 1496/1498 controller. Other configurations are possible. See the main part of 1496/1498 manual for additional parameters and options.

1. Wring

Dynisco 1496

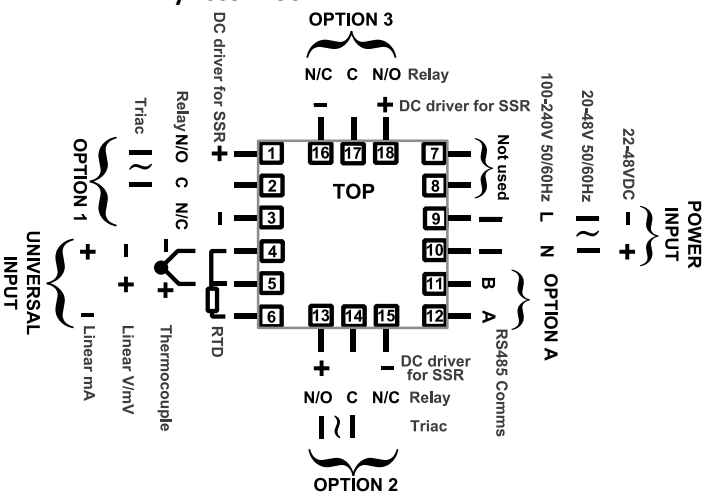

Dynisco 1498

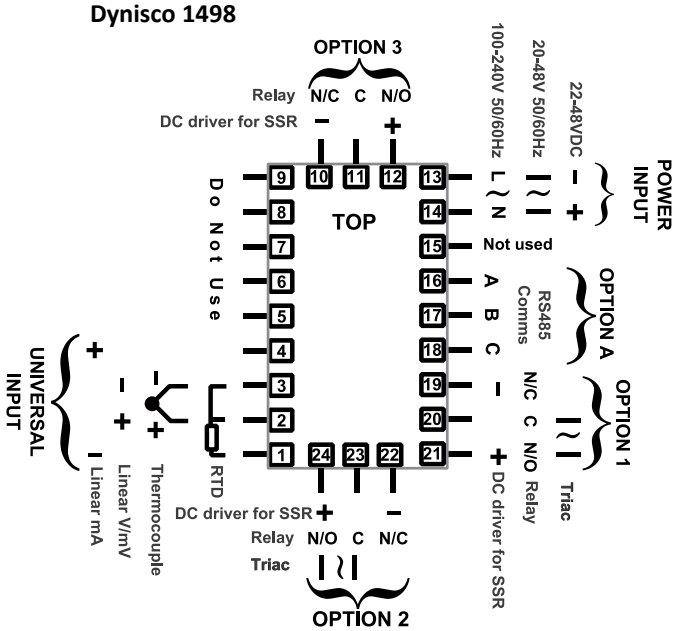

2. Configuration

From the main operator screen:

- Enter Select mode by holding ↵ and pressing △
- Press △ until upper display reads Conf
- Press ↵, ULoc is displayed
- Press △ to change ULoc code to 44 then press ↵. Func is displayed
- Press △ or ▽ to select required function then press ⏻ to save

HEAt	Heat Only
Cool	Heat/Cool
Indc	Indicator Only

- Press ↵, InPt is displayed. Use △ or ▽ to select sensor type from table below then press ⏻ to save.
- Press ↵ until PLA1 is displayed. Use △ or ▽ to adjust low alarm setpoint then press ⏻ to save
- Press ↵ until bAL2 is displayed. Use △ or ▽ to set band alarm setpoint then press ⏻ to save
- Hold ↵ and press △ to return to Select mode
- Press ▽ until OPtr is displayed, then press ↵ to return to Operator Mode

For the alarms to align with the LEDs and labeling on the front of the controller **Alarm 1 Type** and **Alarm 2 Type** should be left at their default settings. Other parameters in the configuration mode can be left at the default settings.

Code	Input Type	Code	Input Type	Code	Input Type	Code	Input Type	Code	Input Type
bC	TC B °C	kC	TC K °C	nC	TC N °C	P24C	PtRh 20%/40% °c	0_20	0-20 mA DC
bF	TC B °F	kF	TC K °F	nF	TC N °F	P24F	PtRh 20%/40% °F	4_20	4-20 mA DC
CC	TC C °C	k.C	TC K °C 0.1	rC	TC R °C	PtC	RTD °C	0_50	0-50 mV DC
CF	TC C °F	k.F	TC K °F 0.1	rF	TC R °F	PtF	RTD °F	10_50	10-50 mV DC
JC	TC J °C	LC	TC L °C	SC	TC S °C	Pt.C	RTD °C 0.1	0_5	0-5 V DC
JF	TC J °F	LF	TC L °F	SF	TC S °F	Pt.F	RTD °F 0.1	1_5	1-5 V DC
J.C	TC J °C 0.1	L.C	TC L °C 0.1	tC	TC T °C			0_10	0-10 V DC
J.F	TC J °F 0.1	L.F	TC L °F 0.1	tF	TC T °F			2_10	2-10 V DC

3. Operation Mode

There are 3 modes of operation in the controller.
OFF – No temperature control in this mode. Temperature is still displayed
Auto – Normal temperature control mode
mAn – Manually adjust output power level

To change mode:

- Press ⏻, lower display will read Cntr
- Press △ or ▽ to select required mode
- Press ↵

To adjust Setpoint in Auto Mode

- Press ↵, Lower display will read SP
- Press △ or ▽ to set required value.
- Press ↵ to return to normal display

4. Auto Tune

To perform an Auto-Tune, the machine needs to be at ambient temperature.

- Press ↵ to go to setpoint display.
- Adjust setpoint to normal operating temperature (must be at least 15°C/29°F higher than process value)
- Hold ↵ and press △ to enter Select Mode
- Press △ until upper display reads Atun
- press ↵, HLoc is displayed
- Press △ to change HLoc code to 44 then press ↵. Ptun is displayed
- Press △ to change Ptun to On.
- Hold ↵ and press △ to return to Select Mode
- Press ▽ until OPtr is displayed
- Press ↵ to return to Operator Mode

AT light will flash while Pre-Tune is running. Once the Pre-Tune is complete, the AT light will go off.

Contents

1 INTRODUCTION

The 1496, 1498 temperature controller is an economic solution to precision temperature control of extruders. With two DIN sizes and multiple output configurations, the controller is suitable for twin and single screw extruders, both heat only die and adapter zones, in addition to heat cool for barrel zones. 1496, 1498 can also be used in an indicator-only mode, allowing one instrument to be used for all applications. With three default parameter sets for Indicator, Heat and Heat/Cool modes, the 1496, 1498 controller offers the ultimate in flexibility for the control of industrial plastic extruders. 1496, 1498 was designed for fast configuration to match specific settings and default parameters of the extruder. Two alarm settings are possible for process high, process low, SP deviation, band, logical OR / AND, loop alarm for process control security. Process alarms have adjustable hysteresis.

WARNING NOTE: The user should be aware that if this equipment is used in a manner not consistent with the specifications and instructions in this manual, the protection provided by the equipment might be impaired.

Product Codes (ordering options)

	Configuration		Option 1		Option 2		Option 3		Option A		Power Supply	
149	6	1/16 DIN Temperature Controller	0	Not Fitted	0	Not Fitted	0	Not Fitted	0	Not Fitted	0	100-240VAC
			1	Relay	1	Relay	1	Relay	1	RS485	2	24-48VAC or DC
	8	1/8 DIN Temperature Controller	2	DC drive for SSR	2	DC drive for SSR	2	DC drive for SSR				
			8	Triac	8	Triac						

2 SPECIFICATIONS

2.1 Mechanical Specification

Front Panel Size: 1/16 DIN = 48 x 48mm; 1/8 DIN = 96 x 48mm,
Depth Behind Panel: 1/16 DIN = 110mm; 1/8 DIN = 100mm.
Weight: 0.21kg maximum.
Installation: Panel mounting.
Rear Terminal Block: 1/16 DIN = 16 screw terminals; 1/8 DIN = 23 screw terminals.

2.2 Main Power Supply & Environmental Specification

Main Power Supply: 100 to 240VAC, 50/60Hz switching. Option: 24VAC/DC.
Power supply variation: From -15% to +10% (for 100 to 240Vac). From 22 to 65Vdc or from 20 to 48Vac (for optional 24Vac/dc).
Power Consumption: 7.5VA for 100 to 240Vac; 7.5VA for 24Vac; 5W for 24Vdc.
Temperature: 0-°C to 55-°C (Operating), -20 °C to 80 °C (Storage)
Relative humidity: 20% to 95% non-condensing.
Altitude: <2000m
Standards: CE, UL, ULC
CE: Directive 2004/108/EC
EMI: Complies with EN61326 (Susceptibility & Emissions)
ISO: ISO 9001:2008 production environment
Safety consideration: Complies with EN61010-1, UL61010-1 & CSA 22.2 No 1010.192
Panel sealing: Front to IP66 when correctly mounted – refer to section 3 installing.

2.3 Display Specification

Display: LED technology, custom type.
Upper digits: Red color, 4 numeric digits, 7 segments with decimal point 10mm high.
Lower digits: Green color, 4 numeric digits, 7 segments with decimal point 8mm high.
Scaling: -1999 to 9999, with adjustable decimal point

2.4 Universal Input Specification

Thermocouple input types: J, K, C, R, S, T, B, L, N & PtRh20% vs. PtRh40%
Thermocouple calibration: 0.1% of full range, ±1LSD (±1°C for Thermocouple CJC). BS4937, NBS125 & IEC584.
RTD 3 Wire input: PT100, 50Ω per lead maximum (balanced)
PT100 calibration: 0.1% of full range, ±1LSD. BS1904 & DIN43760 (0.00385Ω/Ω/°C).
Accuracy: ±0.1% of input range ±1 LSD (T/C CJC better than 1°C)
Sampling Rate: 4 per second.
Impedance: >10MΩ resistive.
Sensor Break Detection: Thermocouple, RTD. Control outputs turn off.
Isolation: Isolated from all outputs (except SSR driver).

Note:

Universal input must not be connected to operator accessible circuits if relay outputs are connected to a hazardous voltage source. Supplementary insulation or input grounding would then be required.

2.5 Output Specification

Relay

Contact Type & Rating: Single pole double throw (SPDT); 2A resistive at 120/240VAC.
Lifetime: >500,000 operations at rated voltage/current.
Isolation: Basic Isolation from universal input and SSR outputs.

SSR Driver

Drive Capability: SSR drive voltage >10V into 500Ω min.
Isolation: Not isolated from universal input or other SSR driver outputs.

Triac

Operating Voltage: 20 to 280Vrms (47 to 63Hz).
Current Rating: 0.01 to 1A (full cycle rms on-state @ 25°C); derates linearly above 40°C to 0.5A @ 80°C.
Isolation: Reinforced safety isolation from inputs and other outputs.

2.6 Optional Serial Communication Interface Specification

Serial interface: RS-485 type.
Baud rate: 1200, 2400, 4800, 9600 or 19200 bps.
Protocol type: Modbus/West ASCII
Isolation: Reinforced safety isolation from all inputs and outputs.

3 INSTALLATION

3.1 Unpacking

Remove the product from its packing. Retain the packing for future use, in case it is necessary to transport the instrument to a different site or to return it to the supplier for repair/testing. The instrument is supplied with a panel gasket and push-fit fixing strap. A quick start manual is supplied with the instrument, in one or more languages. Examine the delivered items for damage or defects. If any are found, contact your supplier immediately.

3.2 Dimensional Information

Dimensions: 1/16DIN = 48×48×120mm, 1/18DIN = 96×48×110mm
Depth behind panel: 1/16DIN = 110mm, 1/18DIN = 100mm
Wight: 0.21kg Maximum

3.3 Installation

CAUTION:

Installation should be only performed by technically competent personnel. It is the responsibility of the installing engineer to ensure that the configuration is safe. Local Regulations regarding electrical installation & safety must be observed - e.g. US National Electrical Code (NEC) or Canadian Electrical Code. Impairment of protection will occur if the product is used in a manner not specified by the manufacturer.

3.3.1 Installing Option Modules

1/16 DIN Size Instruments			1/8 DIN Size Instruments		
CPU PCB Option Module 1 Option Module2	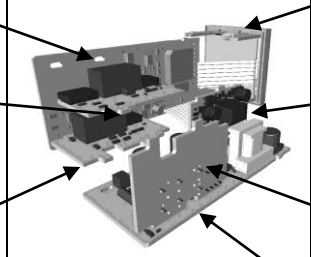	Mounting Struts Option Module A Option Module 3 PSU PCB	CPU PCB Option Module2 Option Module1	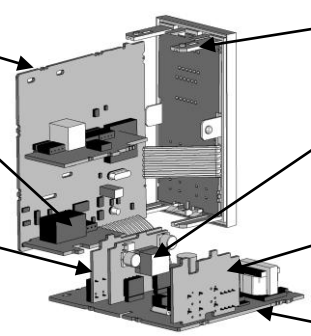	Mounting Struts Option Module A Option Module 3 PSU PCB

To access modules 1 or A, first detach the PSU and CPU boards from the front by lifting first the upper, and then lower mounting struts. Gently separate the boards.

a. Plug the required option modules into the correct connectors, as shown below.
b. Locate the module tongues in the corresponding slot on the opposite board.
c. Hold the main boards together while relocating back on the mounting struts.
d. Replace the instrument by aligning the CPU and PSU boards with their guides in the housing, and then slowly push the instrument back into position.

3.3.2 Option Module Connectors

1/16 DIN Size Instruments

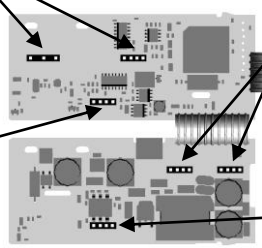

1/8 DIN Size Instruments

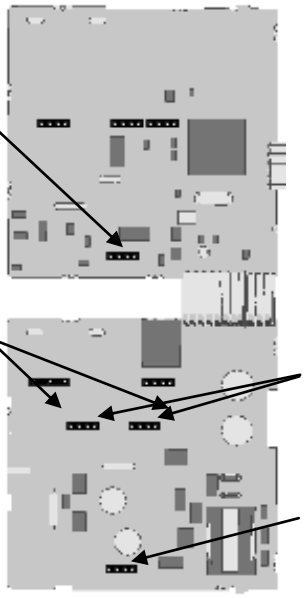

3.4 Panel-Mounting

The mounting panel must be rigid and may be up to 6.0mm (0.25 inches) thick. The cut-out sizes are:

Cut-Out Dim A	**Cut-Out Dim B**
$^{1}/_{16}$ & $^{1}/_{8}$ DIN = 45mm (+0.5mm/-0.0mm)	$^{1}/_{16}$ DIN = 45mm (+0.5mm/-0.0mm) $^{1}/_{8}$ DIN = 92mm (+0.5mm/-0.0mm)

Instruments may be mounted side-by-side in a multiple installation, but instrument to panel moisture and dust sealing will be compromised. Allow a 20mm gap above, below and behind the instrument for ventilation. **The cut-out width (for n instruments) is: (48n – 4)mm.**
If panel sealing must be maintained, mount each instrument into an individual cut-out with 6mm or more clearance between the edges of the holes.

Note:
The mounting clamp tongues may engage the ratchets either on the sides or the top/bottom faces of the Instrument housing. When installing several Instruments side-by-side in one cut-out, use the ratchets on the top/bottom faces.

CAUTION:

Ensure the inside of the panel remains within the instrument operating temperature and that there is adequate airflow to prevent overheating.

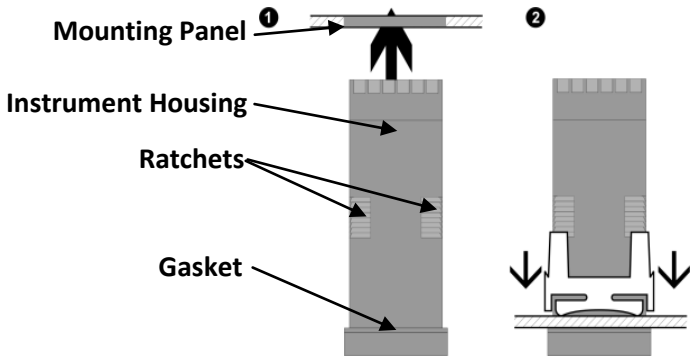

1. Insert instrument into the panel cut-out.

2. Hold front bezel firmly (*without pressing on display area*), and re-fit mounting clamp.
   Push clamp forward, using a tool if necessary, until gasket is compressed and instrument held firmly in position.

Figure 2 Panel-Mounting the instrument

CAUTION:

For an effective IP66 seal against dust and moisture, ensure gasket is well compressed against the panel, with the 4 tongues located in the same ratchet slot.
Once the instrument is installed in its mounting panel, it may be subsequently removed from its housing, if necessary, as described in the Fitting and Removing Option Modules section.

4 ELECTRICAL INSTALLATION

CAUTION:

Installation should be only performed by technically competent personnel. It is the responsibility of the installing engineer to ensure that the configuration is safe.
Local Regulations regarding electrical installation & safety must be observed (e.g. US National Electrical Code (NEC) or Canadian Electrical Code).

4.1 Installation Considerations

Ignition transformers, arc welders, motor drives, mechanical contact relays and solenoids are examples of devices that generate electrical noise in typical industrial environments. The following guidelines MUST be followed to minimize their effects.

1. If the instrument is being installed in existing equipment, the wiring in the area should be checked to ensure that good wiring practices have been followed.
2. Noise-generating devices such as those listed should be mounted in a separate enclosure. If this is not possible, separate them from the instrument, by the largest distance possible.
3. If possible, eliminate mechanical contact relays and replace with solid-state relays. If a mechanical relay being powered by an output of this instrument cannot be replaced, a solid-state relay can be used to isolate the instrument.
4. A separate isolation transformer to feed only the instrumentation should be considered. The transformer can isolate the instrument from noise found on the AC power input.

4.2 AC Power Wiring - Neutral (for 100-264 V-AC versions)

It is good practice to ensure that the AC neutral is at or near ground (earth) potential. A proper neutral will help ensure maximum performance from the instrument.

4.3 Wire Isolation

Three voltage levels of input and output wiring may be used with the unit:

1. Analogue input or output (for example thermocouple, RTD)
2. Relays outputs
3. AC power

CAUTION:

Only wires of the same category should be run together.
If any wires need to run parallel with any other lines, maintain a minimum space of 150mm between them.
If wires MUST cross each other, ensure they do so at 90 degrees to minimize interference.

4.4 Use of Shielded Cable

All analog signals must use shielded cable. This will help eliminate electrical noise induction on the wires. Connection lead length must be kept as short as possible while keeping the wires protected by the shielding. The shield should be grounded at one end only. The preferred grounding location is at the sensor, transmitter or transducer.

4.5 Noise Suppression at Source

Usually when good wiring practices are followed, no further noise protection is necessary. Sometimes in severe electrical environments, the amount of noise is so great that it has to be suppressed at the source. Many manufacturers of relays, contactors etc supply 'surge suppressors' which mount on the noise source. For those devices that do not have surge suppressors supplied, Resistance-Capacitance (RC) networks and/or Metal Oxide Varistors (MOV) may be added.
Inductive coils:- MOVs are recommended for transient suppression in inductive coils, connected in parallel and as close as possible to the coil. Additional protection may be provided by adding an RC network across the MOV.

4.6 Sensor Placement (Thermocouple or RTD)

If the temperature probe is to be subjected to corrosive or abrasive conditions, it must be protected by an appropriate thermo well. The probe must be positioned to reflect true process temperature:
1. In a liquid media - the most agitated area
2. In air - the best circulated area
CAUTION: The placement of probes into pipe work some distance from the heating vessel leads to transport delay, which results in poor control. For a two wire RTD, a wire link should be used in place of the third wire (see the wiring section for details). Two wire RTDs should only be used with lead lengths less than 9 feet (3 meters). Use of three wire RTD's is strongly recommended to reduce errors do to lead resistance.

4.7 Connections and Wiring

CAUTION:

All external circuits connected must provide double insulation. Failure to comply with the installation instructions may impact the protection provided by the unit.

WARNING:

TO AVOID ELECTRICAL SHOCK, AC POWER WIRING MUST NOT BE CONNECTED TO THE SOURCE DISTRIBUTION PANEL UNTIL ALL WIRING PROCEDURES ARE COMPLETED. CHECK THE INFORMATION LABEL ON THE CASE TO DETERMINE THE CORRECT VOLTAGE BEFORE CONNECTING TO A LIVE SUPPLY.

Use Copper Conductors (except for T/C Input):

1496 Controller wiring diagram:

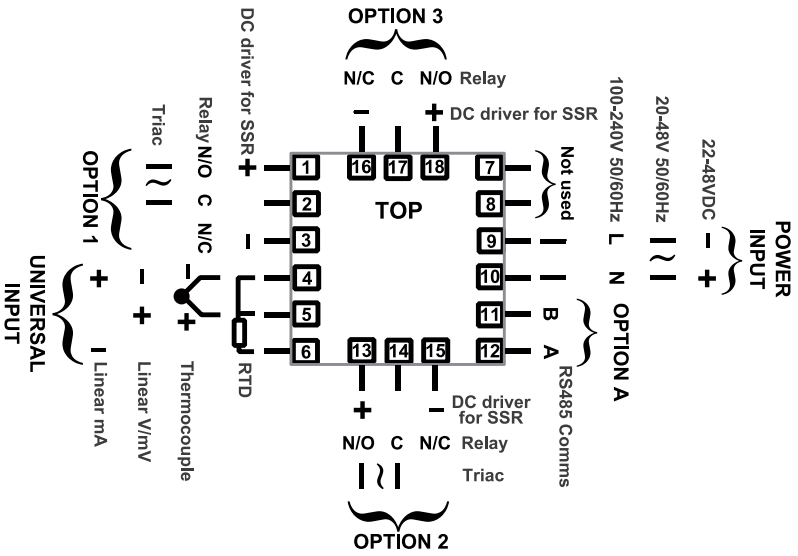

1498 Controller wiring diagram:

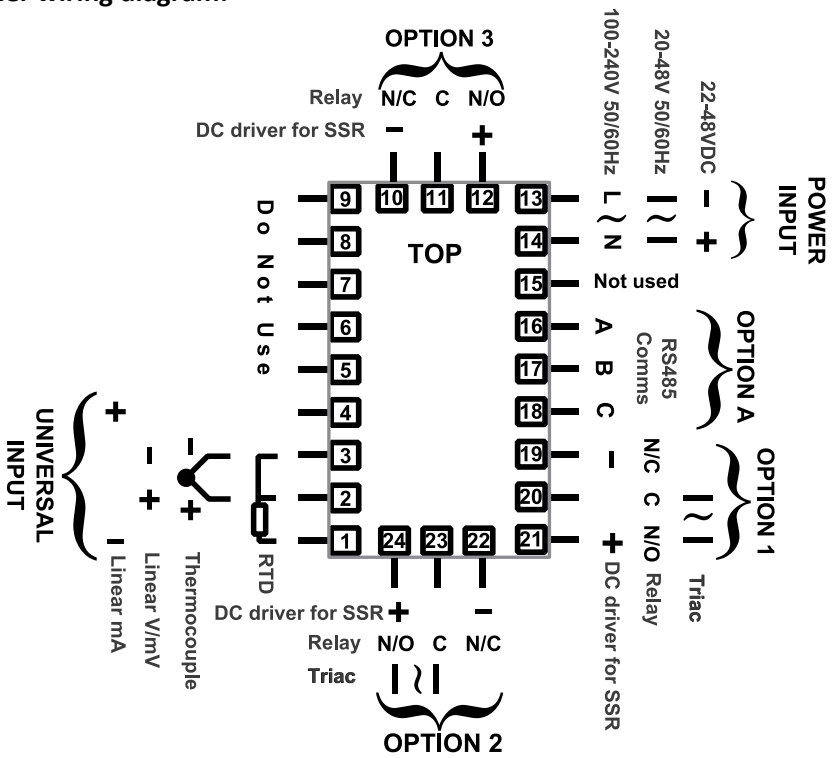

Note: The wiring diagrams above shows all possible combinations. The actual connections required depend on the exact model and options fitted.

5 POWERING UP

CAUTION:

Ensure safe wiring practices have been followed. When powering up for the first time, disconnect the output connections.

The instrument must be powered from a supply according to the wiring label on the side of the unit. The supply will be either 100 to 240V AC, or 24/48V AC/DC powered. Check carefully the supply voltage and connections before applying power.

5.1 Powering Up Procedure

At power up, a self-test procedure is automatically started, during which the display and LED indicators are all lit. At the first power up from new, the message “Go to Configuration mode” (Goto Conf) is displayed. Access to other menus is denied until configuration mode is completed. At all other times, the instrument returns to Operation Mode once the self-test procedure is complete.

5.2 Display

The instrument has 4 digit 10mm red upper and 8mm inched (mm) green lower 8 segment display plus 5 indicators. The upper display typically shows the process variable and adjustable variables ranges or descriptions. The lower display typically shows the set point values and adjustable parameters.

5.3 LED Functions

There are five red LED's that by default. It indicates the status of the primary and secondary control outputs, automatic tuning and alarm status. The top line of the graphical display has four labels for LED indicators.

5.4 Keypad

Each instrument has four keypad switches, which are used to navigate through the user menus, set the manual, auto or off tunings and adjust the parameter values.


Moves backwards to the previous parameter or screen in the current mode.
CAUTION: If editing a parameter, ensure that the current (highlighted) parameter value is saved before pressing the key; otherwise this action will not update the instrument to the value displayed.


Editable values can be decreased by pressing this key. Holding the key down speeds up the change.


Editable values can be increased by pressing this key. Holding the key down speeds up the change.


Turn the Operation mode on and off.
Save and update parameter’s value.

6 MESSAGES AND ERROR INDICATORS

6.1 Parameters in Default Conditions

When the instrument is powered on for the first time or the hardware configuration has been changed, the display will display “Go to configuration”.

Press ↵ to enter the configuration mode, next press △ or ▽ to enter the unlock code, then press ↵ to proceed.

Upper Display: Conf

Lower Display: Goto

6.2 Input Problems

Input Sensor Break

Whenever a problem is detected with the process variable or auxiliary input connections, their displayed value is replaced with the word “OPEN”. This may be the result of a failed sensor, a broken connection or an input circuit fault.

Upper Display: OPEn

Lower Display: Normal

Correct the signal/wiring problem to continue normal operation.

Input Over Range

If the measured process variable value is more than 5% above than the Scale Range Upper Limit, its value is replace by “[HH]”.

Upper Display: [HH]

Lower Display: Normal

Input Under Range

If the measured process variable value is more than 5% below than the Scale Range Lower Limit, its value is replace by “[LL]”.

Upper Display: [LL]

Lower Display: Normal

6.3 Option Module Errors

The “Option n Error” display is shown when an error detected with the installed option modules - where “n” is the slot number for the fault. Replace the module in slot “n”. If this does not solve the problem, return the instrument for servicing.

Option 1 Error

Upper Display: Err

Lower Display: OPn1

Option 2 Error

Upper Display: Err

Lower Display: OPn2

Option 3 Error

Upper Display: Err

Lower Display: OPn3

Note: All these messages indicate that an error has occurred or there is a problem with the process variable signal or its wiring.

CAUTION:

Do not continue with the process until the issue is resolved.

7 CONFIGURATION AND USE

7.1 Operation Mode

This is the mode used during normal operation of the instrument. It can be accessed from the Main Menu, and is the usual mode entered at power-up.

Note: All Configuration mode and Setup mode parameters must be set as required before starting normal Operation mode. It is the responsibility of the installing engineer to ensure that the configuration is safe for the intended application.

WARNING:

DURING NORMAL USE, THE USER MUST NOT REMOVE THE CONTROLLER FROM ITS HOUSING OR HAVE UNRESTRICTED ACCESS TO THE REAR TERMINALS, AS THIS WOULD PROVIDE POTENTIAL CONTACT WITH HAZARDOUS LIVE PARTS.

7.1.1 Navigating in Operator Mode

Press ↵ to scroll through the parameters. When a displayed value can be adjusted, then press △ or ▽ to set the required value.

Note: All Operator Mode parameters in Display strategy 6 are read only (see di SP in configuration mode), they can only be adjusted via Setup mode.

7.1.2 OPERATING MODE SELECTION

In the Operation Mode main display press ⏻, then the upper display shows Cntr .

Press △ or ▽ to select operation mode, lower display shows:

- OFF : Control and alarms off
- Auto : Control in Automatic mode
- mAn : Control in Manual mode

After the selection, press ↵ to save the selection or press ⏻ to discard the selection.

Controller display will back to the main operation display.

7.1.3 OFF Control mode:

In the OFF control mode, disabling control turns off all control outputs (Primary and Secondary power output levels are set to zero).

CAUTION:

Use with care. The instrument is not able to control the process when control is disabled. The Output Power Lower Limit parameters are also ignored.

7.1.4 Automatic Control mode:

While in the Automatic control mode, the LOW and BAND indicators will flash and the lower display will show the set point value. The controller will automatically reach the set point based on the PID control parameters.

7.1.5 Manual Control mode:

While in Manual Control mode, the LOW and BAND indicators will flash and the lower display will show PXXX (where xxx is the current manual power level). Switching to/from manual mode is made via Bumpless Transfer. Press △ or ▽ to set the required output power level.

CAUTION:

The Manual Mode output power level can be adjusted from 0 to 100% (-100 to +100% for dual control). It is not restricted by the 1PoL (Primary Output Power Limit) parameters.

7.2 SELECT MODE

This Select mode is used to access the various features and configuration menus available in the instrument. The available modes are dependent upon the features and options fitted and the way in which it has been configured.

7.2.1 Entering and Navigating the Select mode

Holding down ↵ and pressing △ from Operation Mode and most other screens will cause the unit to enter the Main Menu.

It can be accessed at any time by holding down ↵ and pressing △. Once in the Select mode, press ▽ or △ to choose the required mode, press ↵ to enter the selected mode. An unlock code is required to prevent unauthorized entry to Configuration, Setup and Auto-tune modes. Press ▽ or △ to enter the unlock code, and then press ↵ to proceed.

7.2.2 Unlock Codes

To prevent unauthorized entry, most modes require a pass-code (1 to 9999) to gain entry.

The default unlock code for Configuration, Setup and Auto-tune modes are **44** and the current codes can be viewed and changed from the Lock Code View in the sub selection of each mode.

7.3 SET UP MODE

An easy wizard runs automatically at first ever power-up or if whenever a Reset To Defaults is carried out. Users can follow the screens to setup parameters required for typical applications. The Wizard can also be selected manually from the Select mode. Once completed, the Setup mode exits to Operation Mode.

7.3.1 Manual entering and navigating in the Setup mode

CAUTION:

Adjustments to these parameters should only be performed by personnel competent and authorized to do so.

The Setup mode can be selected from the Select mode (refer to Select mode section).

Press ↵ to scroll through the setup parameters, then Press ▽ or △ to set the required value.

Press ⏻ to accept the change; otherwise the parameter will revert to previous value.

Hold down ↵ and press △ to exit from the Setup mode.

Note:

With the exception of the first ever power-up, entry into this mode is security-protected by the Setup Wizard Lock Code. Refer to the Lock Code View section for more details.

Note: Parameters displayed depend on how instrument has been configured.

7.3.2 Setup Parameters:

Input Filter Time Constant

This parameter is used to filter out extraneous impulses affecting the process variable value. The filtered PV is used for all PV dependent functions (display, control, alarm etc). Use this parameter with care as it will also slow the response to genuine process changes.

Lower Display: FiLt

Upper display adjustment Range: OFF or 0.1 to 100.0 seconds.

Default value = 2.0 seconds.

Process Variable Offset

The Process variable offset is used to modify the measured process variable value. Use this parameter to compensate for errors in the displayed process variable. Positive values are added to the process variable reading, negative values are subtracted. Caution: This parameter is in effect, a calibration adjustment; it must be used with care. Injudicious use could lead to the displayed value bearing no meaningful relationship to the actual process variable. There is no front panel indication of when this parameter is in use.

Lower Display: OFF

Upper display adjustment Range: ±Input span of controller

Default Value = 0

Primary Power

Displays the current Primary and Secondary control power levels (each 0 to 100%) to aid manual tuning

Lower Display: PPw

Upper display adjustment Range: Current power levels (read only)

Default Value = N/A

Secondary Power

Displays the current Primary and Secondary control power levels (each 0 to 100%) to aid manual tuning

Lower Display: SPw

Upper display adjustment Range: Current power levels (read only)

Default Value = N/A

Primary Proportional Band

The portion of the input span over which the Primary Output power level is proportional to the process variable value. Applicable if Control Type is single or dual. For dual control a Secondary Proportional band is used for the second output. The Control Action can be Direct or Reverse acting.

Lower Display: Pb_P

Upper display adjustment Range: 0.0% (On-Off Control) or 0.5 to 999.9

Default Value = 0.50 for Heat and Heat/Cool

Note: This screen is Read Only during automatic tuning

Secondary Proportional Band

The portion of the input span over which the Secondary Output power level is proportional to the process variable value. The Control action for the Secondary Output is always the opposite of the Primary output. The Secondary Proportional Band is only applicable when Dual Control Type is used.

Lower Display: Pb_P

Upper display adjustment Range: 0.0% (On-Off Control) or 0.5 to 999.9

Default Value = 0.50 for Heat and Heat/Cool

Note: This screen is Read Only during automatic tuning

Automatic Reset (Integral Time)

Integral action biases proportional control output(s) to compensate for process load variations, until the control deviation value is zero. Decreasing the time constant increases the Integral action. This parameter is not available if the primary output is set to On-Off.

Lower Display: ArSt

Upper display adjustment Range: 1 sec to 99 minutes 59 seconds and OFF.

Default value = 20.00 for Heat; 6.30 for Heat/Cool

Note: This screen is Read Only during automatic tuning.

Rate (Derivative Time)

The Derivative Time Constant defines how the control action responds to the rate of change in the process variable. The power is decreased if the PV is rising, or increased if the PV is falling. This parameter is not available if primary control output is set to On-Off, and it is normally set to OFF in modulating value applications as it can cause premature wear due to constant small adjustments to the valve position.

Lower Display: rAtE

Upper display adjustment Range: 0 seconds to 99 minutes 59 seconds

Default value = 5.00 for Heat; 1.30 for Heat/Cool

Note: This screen is Read Only during automatic tuning.

Overlap/Deadband

The Overlap/Dead band parameter defines the portion of the primary and secondary proportional bands over which both outputs are active (called Overlap), or neither is active (called Dead band). This is adjustable in the range -20% to +20% of the sum of the two proportional bands. Positive values = Overlap, negative values = Dead band.

Overlap/dead band is applicable if the primary output is set for On-Off control or there is no Secondary Output. If the Secondary Output is set for On-Off, this parameter has the effect of moving the On-Off Differential band of the Secondary Output to create the overlap or dead band. When Overlap/Dead band = OFF, the edge of the Secondary Output Differential band coincides with the point at which the Primary Output = 0%.

Lower Display: OL

Upper display adjustment Range: -20% to +20% of Primary and Secondary Proportional Band

Default value = 0.

Manual Reset (Bias)

Used to manually bias proportional output(s) to compensate for control deviation errors due to process load variations. Bias is expressed as a percentage of output power. This parameter is not applicable if the Primary output is set to ON-OFF control. If the process variable settles below set point use a higher Bias value to remove the error, if the process variable settles above the set point use a lower Bias value. Integral action performs a similar function automatically when using PI control. Lower Bias values will also help to reduce overshoot at process start up.

Lower Display: bi AS

Upper display adjustment Range: 0% (-100% if dual control) to 100%.

Default value = 25%.

Primary ON/OFF Differential

A switching differential, centered about the set point, when using On-Off control. Relay 'chatter' can be eliminated by proper adjustment of this parameter, but too large a value may increase process variable oscillation to unacceptable levels. On-Off differential is also known as hysteresis or dead band.

Lower Display: di FP

Upper display adjustment Range: 0.1% to 10.0% of input span centered about the set point. (Entered as a percentage of span)

Default value = 0.5%.

Secondary ON/OFF Differential

Lower Display: di FS

Upper display adjustment Range: 0.1% to 10.0% of input span centered about the set point. (Entered as a percentage of span)

Default value = 0.5%.

Primary & Secondary ON/OFF Differential

Lower Display: di FF

Upper display adjustment Range: 0.1% to 10.0% of input span centered about the set point. (Entered as a percentage of span)

Default value = 0.5%.

Set Point Upper Limit

The maximum value allowed for set points. It should be set to keep the set point below a value that might cause damage to the process. The adjustment range is between Scale Range Upper Limit and the Set point Lower Limit. If the value is moved below the current value of a set point, that set point will automatically adjust to keep within bounds.

Lower Display: SPuL

Upper display adjustment Range: Current Set Point to Range max

Default Value = R/max

Set Point Lower limit

The minimum value allowed for set points. It should be set to keep the set point above a value that might cause damage to the process. The adjustment range is between the Set point Upper Limit and the Scale Range Lower Limit. If the value is moved above the current value a set point, that set point will automatically adjust to keep within bounds.

Lower Display: SPLL

Upper display adjustment Range: Range Minimum to Current Set Point

Default Value = R/min

Primary Output Power Limit

Used to limit the power levels of the primary control outputs. Normally the instrument can set these outputs to any value between 0% and 100%. This parameter is not applicable if that output is set for On-Off control.

Use with caution: The instrument will not be able to control the process if the limits do not allow the outputs to be set to the correct values to maintain set point.

Lower Display: OPuL

Upper display adjustment Range: 0% to 100% of full power

Default Value = 100%.

Output 1 Cycle Time

For time proportioning outputs, the cycle time is used to define the time over which the controller averages the ON vs. OFF time, in order to provide the required correcting variable. Each Time-Proportioning output has its own adjustable cycle time. Shorter cycle times give better control, but at the expense of reduced life when used with electromechanical control devices (e.g. relays or solenoid valves).

Lower Display: Ct1

Upper display adjustment Range: 0.5, 1, 2, 4, 8, 16, 32, 64, 128, 256 or 512 seconds.

Default value = 4 seconds for Heat and Heat/Cool.

Output 2 Cycle Time

Lower Display: Ct2

Upper display adjustment Range: 0.5, 1, 2, 4, 8, 16, 32, 64, 128, 256 or 512 seconds.

Default value = 8 seconds for Heat/Cool.

High Alarm 1 value

An independent high alarm value parameter is available for each alarm that is set as Process High type. It defines the process variable value above which Alarm n will be active.

Lower Display: PhA1

Upper display adjustment Range: Range minimum to range maximum

Default Value = 300.

Low Alarm 1 value

An independent low alarm value parameter is available for each alarm that is set as Process Low type. It defines the process variable value below which Alarm n will be active.

Lower Display: PLA1

Upper display adjustment Range: Range minimum to range maximum

Default Value = 130.

Deviation Alarm 1 Value

Defines the amount of control deviation considered acceptable before a deviation alarm is activated. A positive value (deviation high) sets the alarm point above the current actual set point; a negative value (deviation low) sets the alarm point below actual set point. If the process variable deviates from the actual set point by a margin greater than this value, the deviation alarm becomes active. If an alarm is required if the control deviation is either side of the set point, consider using a Band alarm or a logical combination of a deviation high and deviation low alarm.

Lower Display: dAL1

Upper display adjustment Range: ±Span from set point in display units.

Default value = 5.

Band Alarm 1 value

The amount of control deviation that is acceptable before a Band Alarm is activated. If the process variable is more than the value of this band from the actual set point, the alarm will be active.

Lower Display: bAL1

Upper display adjustment Range: 1 LSD to span from the set point.

Default value = 5.

Alarm 1 Hysteresis

An adjustable band through which the process variable must pass before the alarm will change state. This Hysteresis is only applicable to alarms based on the Process Value or Control Deviation, as illustrated below. The band is always on the "safe" side of an alarm point, e.g. a high alarm's hysteresis band is below the high alarm value, and a low alarm's hysteresis is above the low alarm value. Rate Of Change Alarms have a different type of hysteresis based on the length of time the rate is above the threshold.

Lower Display: AH41

Upper display adjustment Range: 1 LSD to full span in display units.

Default value = 1.

High Alarm 2 Value

Refer to High Alarm 1 Value for description.

Lower Display: PhA2

Upper display adjustment Range: Range minimum to range maximum

Default Value = R/max.

Low Alarm 2 value

Refer to Low Alarm 1 Value for description.

Lower Display: PLA2

Upper display adjustment Range: Range minimum to range maximum

Default Value = R/min.

Deviation Alarm 2 Value

Refer to Deviation Alarm 2 Value for descriptions.

Lower Display: dAL2

Upper display adjustment Range: ±Span from set point in display units.

Default value = 5.

Band Alarm 2 value

Refer to Band Alarm 1 Value for descriptions.

Lower Display: bAL2

Upper display adjustment Range: 1 LSD to span from the set point.

Default value = 5.

Alarm 2 Hysteresis

Refer to Alarm 1 Hysteresis for descriptions.

Lower Display: AH2

Upper display adjustment Range: 1 LSD to full span in display units.

Default value = 1.

Loop Alarm Time

The loop alarm time used when a loop alarm is defined to have a manually set time or whenever On-Off control is selected. This parameter determines the duration of the output saturation condition after which the loop alarm will be activated.

Lower Display: LAt1

Upper display adjustment Range: 1 sec to 99mins. 59sencs.

Default value = 99.59.

Auto Pre-tune

When the Auto Pre-Tune is enabled, a Pre-Tune activation is attempted at every power-up (standard Pre-Tune activation rules apply). Auto Pre-Tune is useful when the process to be controlled may vary significantly each time it is run. Auto Pre-Tune ensures that the process is tuned correctly each time the process is started. Self-Tune may also be engaged to fine-tune the controller.

Lower Display: APt

Upper display adjustment Range: Enabled (EnAb) or Disabled (di SA).

Default value = Disabled.

Set point ramp adjustment shown in Operator Mode

Enables or disables the viewing and adjustment of the set point ramp rate in Operation Mode. This parameter does not disable the ramping SP feature; it just removes it from Operation Mode. It can still be viewed and adjusted in the Control Configuration sub-menu. To turn off ramping, the ramp rate must be set to OFF.

Lower Display: SPr

Upper display adjustment Range: Enabled (EnAb) or Disabled (di SA).

Default Value = Disabled

SP Ramp Rate Value

The rate at which the actual set point value will move towards its target value, when the set point value is adjusted or the active set point is changed. With ramping in use, the initial value of the actual set point at power up, or when switching back to automatic mode from manual control, will be equal to the current process variable value. The actual set point will rise/fall at the ramp rate set, until it reaches the target set point value. Set point ramping is used to protect

the process from sudden changes in the set point, which would result in a rapid rise in the process variable.

Lower Display: rP

Upper display adjustment Range: 1 to 9999 units/hour or Off (Blank).

Default Value = OFF

Set Point Value

The target value at which the instrument attempts to maintain the process variable, by adjusting its control output power (the correcting variable). Set point values are limited by the scale range limits.

Lower Display: SP

Upper display adjustment Range: Scale range upper to lower limts.

Default Value = Scale range minimum.

Setup Lock Code

The four-digit codes required when entering the Setup Mode. The correct code must be entered to gain access

Lower Display: SLoc

Upper display adjustment Range: 0 to 9999.

Default value = 44

7.4 Configuration Mode

This menu can be used as an alternative to the more limited Setup Wizard when the instrument is configured for the first time, or when further changes are required to the instruments characteristics. Configuration contains a number of sub-menus that allow access to all of the available parameters. The correct settings must be made before attempting to use the instrument in an application. Screens marked w are also shown in the Easy Setup Wizard.

7.4.1 Manual entering and navigating in the configuration mode

CAUTION:

Adjustments to these parameters should only be performed by personnel competent and authorized to do so.

The Configuration mode can be selected from the Select mode (refer to Select mode section).
Press ↵ to scroll through the configuration parameters, then Press ▽ or △ to set the required value.
Press ⏻ to accept the change; otherwise the parameter will revert to previous value.
Hold down ↵ and press △ to exit from the Configuration mode.

Note: Parameters displayed depends on how instrument has been configured. Refer to specification sheet for further details. Parameters marked * are repeated in Setup Mode.

7.4.2 Configuration Parameters:

Function

Three control functions can be selected: Heat Only, Heat/Cool or Indicator Only. Heat only function is a single control for Primary control output only (e.g. Heating or Cooling only). Heat/Cool function is Dual control for Primary and Secondary Control outputs (e.g. Heating & Cooling). Indicator Only function disables all the control output; the instrument will just display the readings from input signal.

Lower Display: Func

Upper display adjustment Range: Heat Only (HEAt), Heat/Cool (CooL) or Indicator Only (Indc).

Default value = Heat Only

Input Range/Type

Lower Display: inPt

Upper display adjustment Range: See the chart below

Upper Display	T/C Type and Range
bC	B: 100 - 1824 ºC
bF	B: 211 - 3315 ºF
CC	C: 0 - 2320 ºC
CF	C: 32 - 4208 ºF
JC	J: –200 - 1200 ºC
JF	J: –328 - 2192 ºF
J.C	J: –128.8 - 537.7 ºC
J.F	J: –199.9 - 999.9 ºF
kC	K: –240 - 1373 ºC
kF	K: –400 - 2503 ºF
k.C	K: –128.8 - 537.7 ºC
k.F	K: –199.9 - 999.9 ºF
LC	L: 0 - 762 ºC
LF	L: 32 - 1403 ºF
L.C	L: 0.0 - 537.7 ºC
L.F	L: 32.0 - 999.9 ºF
nC	N: 0 - 1399 ºC
nF	N: 32 - 2551 ºF
rC	R: 0 - 1759 ºC
rF	R: 32 - 3198 ºF
SC	S: 0 - 1762 ºC
SF	S: 32 - 3204 ºF
tC	T: –240 - 400 ºC
tF	T: –400 - 752 ºF
t.C	T: –128.8 - 400.0 ºC
t.F	T: –199.9 - 752.0 ºF

Upper Display	RTD Input and Range
P24C	PtRh20% vs. 40%:
P24F	PtRh20% vs 40%:
PtC	Pt100: –199 - 800
PtF	Pt100: –328 -
Pt.C	Pt100: –128.8 -
Pt.F	Pt100: –199.9 -

Upper Display	Linear Input and Range
0_20	0 - 20 mA DC
4_20	4 - 20 mA DC
0_50	0 - 50 mV DC
10.5	10 - 50 mV DC
0_5	0 - 5 V DC
1_5	1 - 5 V DC
0_10	0 - 10 V DC
2_10	2 - 10 V DC

Default value = JC (J-Type T/C input in Celsius)

Scale Range Upper Limit

For linear inputs, this parameter is used to scale the displayed process variable. It defines the displayed value when the process variable input is at its maximum value (e.g. if 4 to 20mA represents 0 to 100°C, this parameter should be set to 100). The value can be set anywhere from -1999 to 9999 and can be set to a value less than (but not within 100 LSDs of) the Scale Range Lower Limit, in which case the sense of the input is reversed. Settings = -1999 to 9999 Default value = 1000. For thermocouple and RTD inputs, this parameter is used to reduce the effective span of the input. All span related functions work from the trimmed input span. The parameter can be adjusted within the limits of the range, but not less than 100 LSD's above the Scale Range Lower Limit.

Lower Display: rUL
Upper display adjustment Range: Scale range lower limit +100 to range maximum.
Default value = 300.

Scale Range Lower Limit
For linear inputs, this parameter is used to scale the displayed process variable. It defines the displayed value when the process variable input is at its minimum value (e.g. if 4 to 20mA represents 0 to 100°C, this parameter should be set to 0). The value can be set from -1999 to 9999 and can be set to a value higher than (but not within 100 LSDs of) the Scale Range Upper Limit, in which case the sense of the input is reversed.
For thermocouple and RTD inputs, this parameter is used to reduce the effective range of the input. All span related functions work from the trimmed input span. The parameter can be adjusted within the limits of the range, but not less than 100 LSD's below the Scale Range Upper Limit.
Lower Display: rLL
Upper display adjustment Range: Range minimum to scale range upper maximum -100.
Default value = 0.

Decimal point position
The decimal point setting is not available for the Temperature input. Sets the maximum display resolution to 0; 1; 2 or 3 decimal places. Numbers >9.999 never display more than 2 decimal places, numbers >99.99 never display more than 1 decimal place and numbers >9999 always display without a decimal place
Lower Display: dPoS
Upper display adjustment Range: 0, 1, 2 and 3.
Default value = 1.

Primary Output Control Action
The primary power output direct. Reverse action is typically used with heating applications as it increases the correcting variable as the process variable falls.
Lower Display: CtrL
Upper display adjustment Range: Reverse Acting (rEu) or Direct Acting (dir)
Default value = Reverse.

Alarm 1Type
There are four basic alarm types, Process Alarms, Control Deviation Alarms, Rate of Signal Change Alarms and Event Based Alarms.
Process Alarms are based on the absolute value of the Process Variable. If the PV rises above a high alarm value, or falls below a low alarm value, the alarm will become active.
Deviation Alarms are based on the value of the Control Deviation error. If the PV is more than the high deviation alarm value above set point, or more than the low deviation alarm value below set point, the alarm will become active.

If an alarm is required if the control deviation is either side of the set point, consider using a Band alarm. The amount of control deviation that is acceptable before a Band Alarm is activated. If the process variable is more than the value of this band from the actual set point, the alarm will be active.
Lower Display: ALA1
Upper display adjustment Range: Process High Alarm (P_Hi), Process Low Alarm (P_Lo), Deviation Alarm (dE) or No Alarm (nonE)
Default value = Process Low Alarm for controller function; Process Low Alarm for indicator function.

High Alarm 1 value*
An independent high alarm value parameter is available for each alarm that is set as Process High type. It defines the process variable value above which Alarm n will be active.
Lower Display: PhA1
Upper display adjustment Range: Range minimum to range maximum in display units
Default Value = 300.

Low Alarm 1 value*
An independent low alarm value parameter is available for each alarm that is set as Process Low type. It defines the process variable value below which Alarm n will be active.
Lower Display: PLA1
Upper display adjustment Range: Range minimum to range maximum in display units
Default Value = 130.

Band Alarm 1 value*
The amount of control deviation that is acceptable before a Band Alarm is activated. If the process variable is more than the value of this band from the actual set point, the alarm will be active.
Lower Display: bAL1
Upper display adjustment Range: 1 LSD to span from the set point in display units.
Default value = 5.

Deviation Alarm 1 Value*
Defines the amount of control deviation considered acceptable before a deviation alarm is activated. A positive value (deviation high) sets the alarm point above the current actual set point; a negative value (deviation low) sets the alarm point below actual set point. If the process variable deviates from the actual set point by a margin greater than this value, the deviation alarm becomes active. If an alarm is required if the control deviation is either side of the set point, consider using a Band alarm or a logical combination of a deviation high and deviation low alarm.
Lower Display: dAL1
Upper display adjustment Range: ±Span from set point in display units.
Default value = 5.

Alarm 1 Hysteresis*

An adjustable band through which the process variable must pass before the alarm will change state. This Hysteresis is only applicable to alarms based on the Process Value or Control Deviation, as illustrated below. The band is always on the "safe" side of an alarm point, e.g. a high alarm's hysteresis band is below the high alarm value, and a low alarm's hysteresis is above the low alarm value. Rate Of Change Alarms have a different type of hysteresis based on the length of time the rate is above the threshold.

Lower Display: AH41

Upper display adjustment Range: 1 LSD to full span in display units.

Default value = 1.

Alarm 2 Type

Same options as Alarm 1 Type

Refer to Alarm 1 Type selection.

High Alarm 2 Value*

Refer to High Alarm 1 Value for description.

Lower Display: PhA2

Upper display adjustment Range: Range minimum to range maximum

Default Value = R/max.

Low Alarm 2 value*

Refer to Low Alarm 1 Value for description.

Lower Display: PLA2

Upper display adjustment Range: Range minimum to range maximum

Default Value = R/min.

Band Alarm 2 value*

Refer to Band Alarm 1 Value for descriptions.

Lower Display: bAL2

Upper display adjustment Range: 1 LSD to span from the set point.

Default value = 5.

Deviation Alarm 2 Value*

Refer to Deviation Alarm 2 Value for descriptions.

Lower Display: dAL2

Upper display adjustment Range: ±Span from set point in display units.

Default value = 5.

Alarm 2 Hysteresis*
Refer to Alarm 1 Hysteresis for descriptions.
Lower Display: AH2
Upper display adjustment Range: 1 LSD to full span in display units.
Default value = 1.

Loop Alarm
A loop alarm detects faults in the control feedback loop, by continuously monitoring process variable response to the control output(s). If one of the 5 alarms is defined to be a loop alarm, it repeatedly checks if the PI control output is at saturation. If saturation is reached (0% or 100% power for single control type, -100% or +100% for dual control type), an internal timer is started. Thereafter, if the output has not caused the process variable to be corrected by a predetermined amount 'V' after time 'T' has elapsed, the alarm becomes active. Subsequently, the alarm repeatedly checks the process variable and the PI output. When the process variable starts to change value in the correct sense or when the PI output is no longer at the limit, the alarm is deactivated.

For PI control, the loop alarm time 'T' can be automatic (twice the Integral Time value) or set to a user defined value. Correct operation with the automatic loop alarm time depends upon reasonably accurate PI tuning. The user defined value is always used for On-Off control, and the timer starts as soon as an output turns on.
Lower Display: LAEn
Upper display adjustment Range: Disabled (di SA) or Enabled (EnAb).
Default value = Enabled.

Loop Alarm Time*
The loop alarm time used when a loop alarm is defined to have a manually set time or whenever On-Off control is selected. This parameter determines the duration of the output saturation condition after which the loop alarm will be activated.
Lower Display: LAt1
Upper display adjustment Range: 1 sec to 99mins. 59sencs.
Default value = 99.59.

Alarm Inhibit
Alarm Inhibit prevents unwanted process or deviation alarm activation at power-up or when the controller set point is changed. The alarm activation is inhibited until a 'Safe' condition is present. The alarm operates normally from that point onwards. E.g. if inhibited, a low alarm will not activate at power-up, until the process has first risen above the alarm point and then falls back below.
Lower Display: Inh1
Upper display adjustment Range: No Alarm Inhibited (nonE), Alarm 1 Inhibited (AL A1), Alarm 2 Inhibited (AL A2) or Alarm 1 and Alarm 2 inhibited (both).
Default value = None Inhibited.

Avoid all the double returns between sections...a lot of extra space and odd page breaks.

Output 1 Usage

Sets the use for each output fitted. It can be selected from either control output or Alarms; When an Output Usage is Alarms, this selects which alarm(s) will cause it to change state. From Alarm 1; 2 or a Logical OR/AND of alarms 1 to 2. Each choice is selectable with Direct Action (on during alarm) or Reverse Action (off during alarm).

Lower Display: USE1

Upper display adjustment Range:

Pri	Primary Power
SEc	Secondary Power
AL_d	Alarm 1, Direct
AL_r	Alarm 1, Reverse
A2_d	Alarm 2, Direct
A2_r	Alarm 2, Reverse
LA_d	Loop Alarm, Direct
LA_r	Loop Alarm, Reverse
Or_d	Logical Alarm 1 OR 2, Direct
Or_r	Logical Alarm 1 OR 2, Reverse
Ad_d	Logical Alarm 1 AND 2, Direct
Ad_r	Logical Alarm 1 AND 2, Reverse
AA_d	Alarm 1, Alarm 2 OR Sensor Break, Direct
AA_r	Alarm 1, Alarm 2 OR Sensor Break, Reverse

Default value = Primary Power

Output 2 Usage

Refer to Output 1 Usage

Output 3 Usage

Refer to Output 1 Usage

Display Strategy

Lower Display: di SP

Upper display adjustment Range: 1, 2, 3, 4, 5 or 6

Default value =1

Serial Communications Protocol

Protocol type can be either ASCCII or Modbus.

Lower Display: Prot

Upper display adjustment Range: ASCCII (ASCI), Modbus with No Parity (mbn), Modbus with Even Parity (mbE) or Modbus with Odd Parity (mbo).

Default value = Modbus with No Parity

Serial Communications Bit Rate
This function is used to select the Serial Communication Bit Rate. There are 5 bit rates that can be selected.
Lower Display: bAud
Upper display adjustment Range: 1.2kbps, 2.4kbps, 4.8kbps, 9.6kbps or 19.2kbps.
Default value = 9.6

Serial Communication Address
This function used to set the Serial Communication Interface Address. For communicating with multiple controllers in parallel, set the address to a different value.
Lower Display: Addr
Upper display adjustment Range: 1 to 255 for Modbus; 1 to 99 for ASCII.
Default value = 1

Serial Communication Write
Enables/disables the changing of parameter values via the Serial Communications link, if a communication option such as RS485 is installed. When disabled, all communications are read-only.
Lower Display: CoEn
Upper display adjustment Range: Read/Write (r_w) or Read Only (r_d).
Default setting Read/Write.

Configuration Lock Code
The four-digit codes required when entering the Configuration Mode. The correct code must be entered to gain access
Lower Display: SLoc
Upper display adjustment Range: 0 to 9999.
Default value = 44

7.5 AUTOMATIC TUNING MODE

The Automatic Tune Menu is used engage the Pre-tune and/or Self-tune facilities to assist the user in setting up Proportional band(s), Integral and Derivative parameter values.

Pre-tune can be used to set PI parameters approximately. It is a single-shot routine and is thus self-disengaging when complete. If APt in the Setup mode = EnAb, Pre-tune will attempt to run at every power up*.
Self-tune may then be used to optimize the tuning if required.
If both Pre-tune and Self-tune are engaged the AT indicator will flash until Pre-tune is finished, and then continuously on.

*** Note: Automatic tuning will not engage if proportional band = 0.**
Also, Pre-tune will not engage if set point is ramping, or the PV is less than 5% of input span from the set point.

7.5.1 Manual entering and navigating in the Automatic Tuning Mode

CAUTION:
Adjustments to these parameters should only be performed by personnel competent and authorized to do so.

The Automatic Tuning mode can be selected from the Select mode (refer to Select mode section).
Press ↵ to scroll through the Auto-Tuning parameters, then Press ▽ or △ to set the required value.
Hold down ↵ and press △ to exit from the Auto-Tuning mode.

7.5.2 Automatic Tuning Parameters

Pre-Tune
The Pre-Tune facility artificially disturbs the start-up pattern so that a first approximation of the PI values can be made prior to the set point being reached. During Pre-Tune, the controller outputs full Primary Power until the process value has moved approximately halfway to the set point. At that point, power is removed (or full Secondary Power is applied for Dual Control), thereby introducing an oscillation. Once the oscillation peak has passed, the Pre-Tune algorithm calculates an approximation of the optimum PI tuning terms proportional band(s), integral and derivative.

When Pre-Tune is completed, the PI control output power is applied using the calculated values. Pre-Tune limits the possibility of set point overshoot when the controller is new or the application has been changed.
Lower Display: Ptun
Upper display adjustment Range: ON or OFF.
Default setting: OFF.

Self-Tune

Self-Tune continuously optimises tuning while a controller is operating. It uses a pattern recognition algorithm, which monitors the control deviation. The Self-Tune algorithm observes one complete deviation oscillation before calculating a new set of PI values. Successive deviation oscillations cause the values to be recalculated so that the controller converges on optimal control. When the controller is switched off, these PI terms are stored, and are used as starting values at the next switch on. The stored values may not always be ideal, if for instance the controller is brand new or the application has changed. In these cases, the user can utilise Pre-Tune to establish new initial values. SelfTune will then fine-tune these values as it monitors any control deviation.

Lower Display: Stun

Upper display adjustment Range: ON or OFF.

Default setting: OFF.

Tune Lock

The four-digit codes required when entering the Auto-Tune Mode. The correct code must be entered to gain access

Lower Display: Stoc

Upper display adjustment Range: 0 to 9999.

Default value = 44

7.5 PRODUCT INFORMATION MODE

Note: This is a read only mode describing the instrument and the options.

7.5.1 Manual entering and navigating in the Product Information Mode

The Product Information mode can be selected from the Select mode (refer to Select mode section).
Press ↵ to scroll through the Product information mode parameters.
Hold down ↵ and press △ to exit from the Auto-Tuning mode.
Note: These parameters are all READ ONLY

7.5.2 Product Information Parameters

Input type
Lower Display: In_1
Upper display: Uni
Description: Universal Input

Option 1 module type fitted
Lower Display: OPn1
Upper display: rLY or SSr
Description: Relay Output or SSR Drive Output

Option 2 module type fitted
Lower Display: OPn2
Upper display: rLY or SSr
Description: Relay Output or SSR Drive Output

Option 3 module type fitted
Lower Display: OPn3
Upper display: rLY
Description: Relay Output

Auxiliary Option A Module type fitted
Lower Display: OPnA
Upper display: nonE or r485
Description: No Option Fitted or RS485 Communicators

Firmware Type
Lower Display: Fw
Upper display: Values
Description: Value that represents the firmware type number.

Firmware Issue
Lower Display: iSS
Upper display: Values
Description: Value that represents the firmware Issue number.

Product Revision Level
Lower Display: PrL
Upper display: Values
Description: Value that represents the product Revision Level.

Date of Manufacture
Lower Display: dom
Upper display: Values
Description: Manufacturing Date Code.

Serial number 1
Lower Display: Sn1
Upper display: Values
Description: First Four Digits of Serial Number

Serial number 2
Lower Display: Sn2
Upper display: Values
Description: Middle Four Digits of Serial Number

Serial number 3
Lower Display: Sn3
Upper display: Values
Description: Last Four Digits of Serial Number

8 WARRANTY AND SERVICE

LIMITED WARRANTY. Dynisco warrants that all Products manufactured by Dynisco will be free from defects in material and workmanship and will conform substantially to Dynisco's specifications as set forth in any applicable Product documentation for a period that is product specific (see below), from the date of shipment. Notice of any defect, including a reasonably detailed description of the problem or difficulty experienced, must be made to Dynisco in writing within thirty (30) calendar days following discovery thereof and prior to the expiration of the warranty period as described above. If Dynisco determines that any Product does not conform to the foregoing warranty, Buyer's sole remedy, and Dynisco's entire liability, for breach of the foregoing warranty shall be the repair or replacement, at Dynisco's option, of the non-conforming Product or part or, if neither is, in Dynisco's opinion, commercially feasible, a refund of the purchase price paid for the Product. Defective Products must be returned to Dynisco's plant or a designated Dynisco service center for inspection. Buyer will prepay all freight charges to return any defective or non-conforming Product to Dynisco's designated facility, and Dynisco will deliver the repaired or replacement Products to Buyer freight prepaid. Products returned to Dynisco for which Dynisco provides replacement Products hereunder shall become the property of Dynisco. At Dynisco's option, replacement of any Product may be made by substitution of another Product that is substantially similar in form and function. The warranty on repaired or replacement Products furnished pursuant to this warranty shall be limited to the unexpired portion of the original warranty period. Product warranty is product specific and as follows:

- *Echo Series pressure sensors* — *Two (2) years*
- *Vertex Series pressure sensors* — *Four (4) years*
- *All other pressure sensor series* — *Three (3) years*
- *All other Dynisco products* — *One (1) year*

Limited Warranty. Seller warrants that all Products manufactured by Seller will be free from defects in material and workmanship and will conform substantially to Seller's specifications as set forth in any applicable Product documentation for a period that is product specific (see below), from the date of shipment. Notice of any defect, including a reasonably detailed description of the problem or difficulty experienced, must be made to Seller in writing within thirty (30) calendar days following discovery thereof and prior to the expiration of the warranty period as described above. If Seller determines that any Product does not conform to the foregoing warranty, Buyer's sole remedy, and Seller's entire liability, for breach of the foregoing warranty shall be the repair or replacement, at Seller's option, of the non-conforming Product or part or, if neither is, in Seller's opinion, commercially feasible, a refund of the purchase price paid for commercially feasible, a refund of the purchase price paid for the Product. Defective Products must be returned to Seller's plant or a designated Seller service center for inspection. Buyer will prepay all freight charges to return any defective or non-conforming Product to Seller's designated facility, and Seller will deliver the repaired or replacement Products to Buyer freight prepaid. Products returned to Seller for which Seller provides replacement Products hereunder shall become the property of Seller. At Seller's option, replacement of any Product may be made by substitution of another Product that is substantially similar in form and function. The warranty on repaired or replacement Products furnished pursuant to this warranty

shall be limited to the unexpired portion of the original warranty period. Product warranty is product specific and as follows:

- *Echo Series pressure sensors* — *Two (2) years*
- *Vertex Series pressure sensors* — *Four (4) years*
- *All other pressure sensor series* — *Three (3) years*
- *All other Dynisco products* — *One (1) year*

Limitation of Liability: Seller's warranty obligations shall not apply to any Products that are normally consumed in operation or have a normal life inherently shorter than the warranty period stated herein. The warranty does not apply to failures caused by misuse, mishandling or misapplication. In the event that any Product is altered or repaired by Buyer or any third party without Seller's prior written approval, or is damaged, altered, or installed in other assemblies before correction of any nonconformities, all warranties are void. When, under applicable law, implied warranties may not be excluded in their entirety, such warranties will be limited to the duration of the applicable written warranty.

Products, equipment and accessories not manufactured by Seller are warranted only by the original manufacturer and only if and to the extent set forth in the original manufacturer's warranty as stated on the Product labeling and/or instructions, if applicable.

TO THE FULL EXTENT ALLOWED BY LAW, THE WARRANTY AND REMEDIES SET FORTH IN THESE TERMS AND CONDITIONS ARE EXCLUSIVE AND ARE IN LIEU OF ALL OTHER REPRESENTATIONS, WARRANTIES, TERMS, OR CONDITIONS, WRITTEN OR ORAL, EXPRESS OR IMPLIED, IN FACT OR BY OPERATION OF LAW, STATUTORY OR OTHERWISE, INCLUDING WARRANTIES OF MERCHANTABILITY, FITNESS FOR A PARTICULAR PURPOSE, SATISFACTORY QUALITY, ADHERENCE TO DESCRIPTION, AND NONINFRINGEMENT, ALL OF WHICH ARE HEREBY EXPRESSLY DISCLAIMED. IN NO EVENT SHALL SELLER BE LIABLE TO BUYER OR ANY THIRD PARTY FOR ANY OTHER DAMAGES, INCLUDING WITHOUT LIMITATION ANY SPECIAL, INDIRECT, CONSEQUENTIAL, INCIDENTAL, EXEMPLARY, OR PUNITIVE DAMAGES OF ANY KIND.

THE TOTAL LIABILITY OF SELLER FOR DAMAGES, WHETHER IN CONTRACT OR IN TORT (INCLUDING NEGLIGENCE, WHETHER SOLE OR CONCURRENT), OR OTHERWISE, ARISING OUT OF OR CONNECTED WITH OR RESULTING FROM THE MANUFACTURE, SALE, DELIVERY, RESALE, REPAIR, REPLACEMENT OR USE OF ANY PRODUCTS HEREUNDER SHALL NOT EXCEED THE PURCHASE PRICE PAID BY BUYER FOR THE PRODUCT OR PART THEREOF GIVING RISE TO THE CLAIM.

9. APPENDIX 1:

1496/1498 Terminal Cross Reference with Dynisco Model TCS/TCE

	Polarity	1496 Terminal	TCS Terminal
Power			
100 to 240Vac 50/60Hz	Line	9	11
	Neutral	10	12
14Vdc	+	10	11
	-	9	12
20-48Vac		9	11
		10	12
Universal Input			
Thermocouple (T/C)	+	5	5
	-	4	6
Linear V/mV	+	5	5
	-	4	6
Linear mA	+	4	5
	-	6	6
RTD (3-wire)		6	4
		5	5
		4	6
Option 1			
Relay	N/O	1	7
	Common	2	8
	N/C	3	-
DC driver for SSR	+	1	7
	-	3	8
Triac		1	-
		2	-
Option 2			
Relay	N/O	13	9
	Common	14	10
	N/C	15	-
DC driver for SSR	+	1	9
	-	3	10
Triac		13	-
		14	-
Option 3			
Relay	N/O	18	-
	Common	17	-
	N/C	16	-
DC driver for SSR	+	18	-
	-	16	-
Option 4			
Relay	N/O	-	1
	Common	-	2
	N/C	-	3
Digital Communications			
RS485 Comms	A(+)	12	17
	B(-)	11	18
	Com	-	16

	Polarity	1498 Terminal	TCE Terminal
Power			
100 to 240Vac 50/60Hz	Line	13	23
	Neutral	14	24
14Vdc	+	14	23
	-	13	24
20-48Vac		13	23
		14	24
Universal Input			
Thermocouple (T/C)	+	2	11
	-	3	12
Linear V/mV	+	2	11
	-	3	12
Linear mA	+	4	11
	-	1	12
RTD (3-wire)		1	10
		2	11
		3	12
Option 1			
Relay	N/O	21	13
	Common	20	14
	N/C	19	-
DC driver for SSR	+	21	13
	-	19	14
Triac		20	-
		21	-
Option 2			
Relay	N/O	24	15
	Common	23	16
	N/C	22	-
DC driver for SSR	+	24	9
	-	22	10
Triac		24	-
		23	-
Option 3			
Relay	N/O	12	19
	Common	11	20
	N/C	10	-
DC driver for SSR	+	12	-
	-	10	-
Option 4			
Relay	N/O	-	1
	Common	-	2
	N/C	-	3
Digital Communications			
RS485 Comms	A(+)	16	5
	B(-)	17	6
	Com	18	4