Modular pressure controller Model CPC6050

mensor

Applications

- Healthcare and avionics industry
- Industry (laboratory, workshop and production)
- Transmitter and pressure gauge manufacturers
- Calibration service companies and service industry
- Research and development laboratories

Modular pressure controller, model CPC6050

Special features

- Pressure ranges: -1 ... 210 bar (-15 ... 3,045 psi)
- Control speed 15 s
- Control stability < 0.003 % FS (typical 0.001 % FS)
- Accuracy down to 0.01 % IS (IntelliScale)
- Precision 0.004 % FS

Description

Design

The highly configurable model CPC6050 modular pressure controller offers maximum flexibility to best suit the customers' requirements. The instrument can have up to two independent pressure regulating channels which can operate simultaneously. Each channel can have up to two sensors. The instrument can also have an optional barometric reference for gauge or absolute pressure emulation. This instrument can be specified as a desktop or as 19" rack-mounting kit.

Application

The controller offers many applications within calibration laboratories and production environments because of its pressure range -1 … 210 bar (-15 … 3,045 psi) and accuracy down to 0.01 % IS-50.
Its ability to control pressures as low as 25 mbar (10" of H_20) with a high stability makes it the ideal calibration and verification solution for healthcare and aerospace industries.

Simultaneous calibration channels along with interchangeable plug-and-play pressure sensors and an intuitive GUI makes CPC6050 an easy-to-use and maintain instrument.

Functionality

The touchscreen, along with an intuitive user interface, provide maximum ease-of-use. The large number of menu languages add to its operability. In addition to specifying a certain pressure set point either by entering it via touchscreen or sending it via remote interface, the pressure can be changed in defined, programmable step sizes by using the STEP buttons. Moreover, the user can also easily create extensive test programs using the instrument menu. Depending on the application, the rate of control can be either pre-set precision, high speed or a user-defined variable rate.

ICS Schneider Messtechnik GmbH
Briesestraße 59
D-16562 Hohen Neuendorf / OT Bergfelde
Tel.: 03303 / 504066
Fax: 03303 / 504068
info@ics-schneider.de
www.ics-schneider.de

Software
The WIKA-Cal calibration software enables the convenient calibration of pressure measuring instruments and the generation of test certificates. Additionally, the instrument can also be remotely controlled using the serial command formats, the Mensor standard, SCPI or further optional command sets are available.

Complete test and calibration systems
On request, complete mobile or stationary test systems can be manufactured. There is an IEEE-488.2, RS-232, USB and an Ethernet interface for communication with other instruments, and thus the instrument can be integrated into existing systems.

Backward compatibility
The highly configurable CPC6050 can also be used with pressure sensors of its predecessor model CPC6000. The sensors can be used individually or together with the CPR6050, hence providing the user a complete backward capability.

Specifications
Model CPC6050

Reference pressure sensors model CPR6050		
Pressure range	**Standard**	**Optional**
Accuracy 1)	0.01 % FS 2)	0.01 % IS-50 3)
Gauge pressure	0 ... 0.025 to 0 ... 210 bar (0 ... 0.36 to 0 ... 3,045 psi)	0 ... 1 to 0 ... 210 bar (0 ... 15 to 0 ... 3,045 psi)
Bi-directional	-0.012 ... 0.012 to -1 ... 210 bar (-0.18 ... 0.18 to -15 ... 3,045 psi)	-1 ... 10 to -1 ... 210 bar (-15 ... 145 to -15 ... 3,045 psi)
Absolute pressure 4)	0 ... 0.5 to 0 ... 211 bar abs. (0 ... 7.5 to 0 ... 3,060 psi abs.)	0 ... 1 to 0 ... 211 bar abs. (0 ... 15 to 0 ... 3,060 psi abs.)
Precision 5)	0.004 % FS	0.004 % FS
Calibration interval	365 days 6)	365 days
Optional barometric reference		
Function	The barometric reference can be used to switch pressure types 7), absolute <=> gauge. With gauge pressure sensors, the measuring range of the sensors must begin with -1 bar (-15 psi) in order to carry out an absolute pressure emulation.	
Measuring range	552 ... 1,172 mbar abs. (8 ... 17 psi abs.)	
Accuracy 1)	0.01 % of reading	
Pressure units	39 and two freely programmable	

1) It is defined by the total measurement uncertainty, which is expressed with the coverage factor (k = 2) and includes the following factors: the intrinsic performance of the instrument, the measurement uncertainty of the reference instrument, long-term stability, influence of ambient conditions, drift and temperature effects over the compensated range during a periodic zero point adjustment every 30 days.
2) FS = Full span = end of measuring range - start of measuring range
3) 0.01 % IS-50 accuracy: Between 0 ... 50 % of the full scale, the accuracy is 0.01 % of the half full scale and between 50 ... 100 % of the full scale, the accuracy is 0.01 % of reading.
4) The minimum calibrated range of absolute sensor(s) is 600 mTorr.
5) It is defined as the combined effects of linearity, repeatability and hysteresis throughout the stated compensated temperature range.
6) 180 days for pressure ranges below 1 bar (15 psi) gauge or absolute and -1... +1 bar (-15 ...+14.5 psi) bi-directional. 365 days for remaining of the specified ranges.
7) For a pressure type emulation, we recommend a native absolute pressure sensor, since the zero point drift can be eliminated through a zero point adjustment.

Base instrument	
Instrument	
Instrument version	Standard: desktop case Option: 19" rack-mounting kit
Dimensions	see technical drawings
Weight	approx. 22.7 kg (50 lbs) incl. all internal options
Warm-up time	approx. 15 min

ICS Schneider Messtechnik GmbH
Briesestraße 59
D-16562 Hohen Neuendorf / OT Bergfelde
Tel.: 03303 / 504066
Fax: 03303 / 504068
info@ics-schneider.de
www.ics-schneider.de

Base instrument		
Display		
Screen	8.9" colour LC display with resistive touchscreen	
Resolution	4 ... 6 digits depending on range and units	
Connections		
Pressure connections	up to 8 ports with 7/16"- 20 F SAE, up to 2 ports with 1/8" F NPT and 1 port with 10-32 UNF female	
Filter elements	The instrument has 40-micron filters on all pressure ports.	
Pressure port adapters	Standard: without Option: 6 mm tube fitting, 1/4" tube fitting, 1/4" female NPT fittings, 1/8" female NPT fittings or 1/8" female BSP fittings	
Barometer port adapters	Standard: barb fitting Option: 6 mm tube fitting, 1/4" tube fitting	
Permissible pressure media	Dry, clean air or nitrogen (ISO 8573-1:2010 class 5.5.4 or better)	
Wetted parts	Aluminium, brass, 316 and 316L stainless steel, Buna N, FKM/FPM, PCTFE, PEEK, PTFE, PPS, glass-filled epoxy, RTV, ceramic, silicone, silicone grease, urethane	
Overpressure protection	Safety relief valve fixed to reference pressure sensor and adjusted to specific customised measuring range	
Permissible pressure		
Supply port	~ 110 % FS	
Measure/Control port	max. 105 % FS	
Voltage supply		
Power supply	AC 100 ... 240 V, 50 Hz / 60 Hz	
Power consumption	max. 120 VA	
Permissible ambient conditions		
Storage temperature	0 ... 70 °C (32 ... 158 °F)	
Humidity	5 … 95 % r. h. (non-condensing)	
Compensated temperature range	15 ... 45 °C (59 ... 113 °F)	
Mounting position	horizontal	
Control parameter	**SVR module** [8]	**LPPump module**
Control stability	< 0.003 % FS of the active range (typical 0.001 % FS)	
Control mode	precision, high speed and customised	external supply on/off [9]
Control time	15 s [10]	25 s [10]
Control range	0 ... 100 % FS	
Minimum control pressure	0.0017 bar (0.025 psi) over exhaust pressure or 0.05 % FS whichever is greater	0.0034 bar (0.05 psi) over exhaust pressure or 0.05 % FS whichever is greater
Overshoots	< 0.15 % FS in high-speed control mode (typical < 0.05 % FS in precision control mode)	< 0.3 % FS in high-speed control mode (< 0.1 % FS in pump only mode)
Test volume	50 ... 1,000 ccm	50 ... 300 ccm
Communication		
Interface	Standard: Ethernet, IEEE-488, USB, RS-232 Option: WiFi (with a USB-WiFi adapter)	
Command sets	Mensor, WIKA SCPI, others optional	
Response time	approx. 100 ms	
Internal program	up to 24 sequences with up to 99 steps each	

8) Represents LPSVR, MPSVR, HPSVR and EPSVR
9) External supply is turned off for primary sensor pressure ranges < 0.2 bar (3 psi)
10) Regarding a 10 % FS pressure increase in a 50 ml test volume, in high-speed control mode (SVR) or external supply on (LPPump)

ICS Schneider Messtechnik GmbH
Briesestraße 59
D-16562 Hohen Neuendorf / OT Bergfelde
Tel.: 03303 / 504066
Fax: 03303 / 504068
info@ics-schneider.de
www.ics-schneider.de

Approvals

Logo	Description	Country
CE	**EU declaration of conformity** ■ EMC directive [1] EN 61326 emission (group 1, class A) and interference immunity (industrial application) ■ Low voltage directive	European Union
EAC	**EAC** ■ Pressure equipment directive ■ Low voltage directive	Eurasian Economic Community
	KazInMetr Metrology, measurement technology	Kazakhstan

1) **Warning!** This is class A equipment for emissions and is intended for use in industrial environments. In other environments, e.g. residential or commercial installations, it can intefere with other equipment under certain conditions. In such circumstances the operator is expected to take the appropriate measures.

Certificates

Certificate	
Calibration [2]	Standard: A2LA calibration certificate Option: DKD/DAkkS calibration certificate
Recommended recalibration interval	1 year (dependent on conditions of use)

2 Calibration in a horizontal position / operating position.

Approvals and certificates, see website

Working ranges of the controller modules

Bi-directional or gauge pressure [bar (psi)] [3]

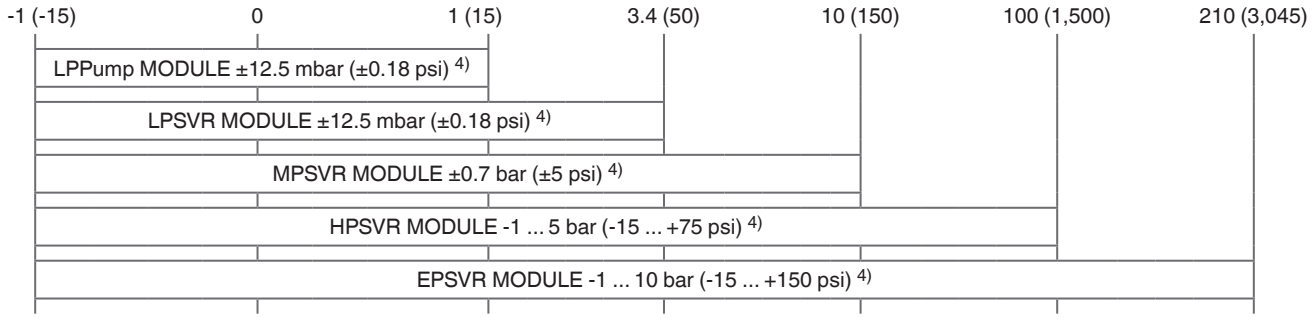

Absolute pressure [bar (psi)] [3]

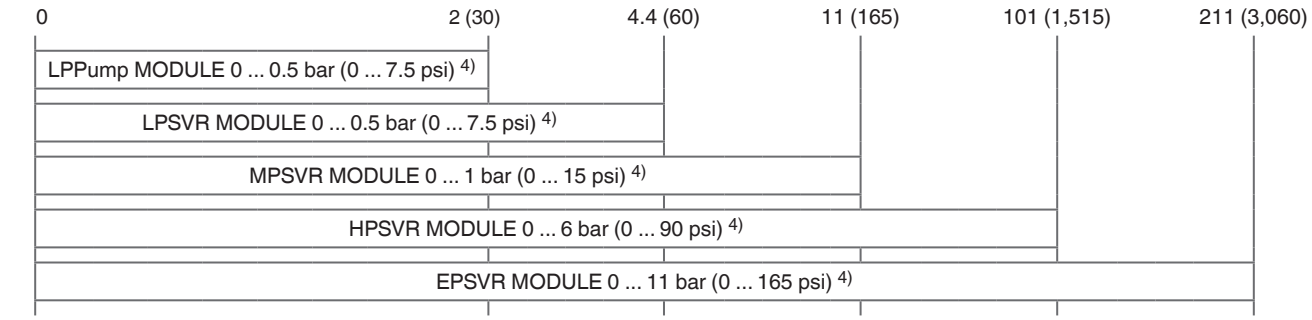

3) Mixing of absolute pressure and gauge pressure sensors in a module is not possible.
4) Smallest recommendable sensor range

For controlling absolute pressure a vacuum pump connected at the supply low port is required.

ICS Schneider Messtechnik GmbH
Briesestraße 59
D-16562 Hohen Neuendorf / OT Bergfelde
Tel.: 03303 / 504066
Fax: 03303 / 504068
info@ics-schneider.de
www.ics-schneider.de

Dimensions in mm (in)

Desktop case

Front view

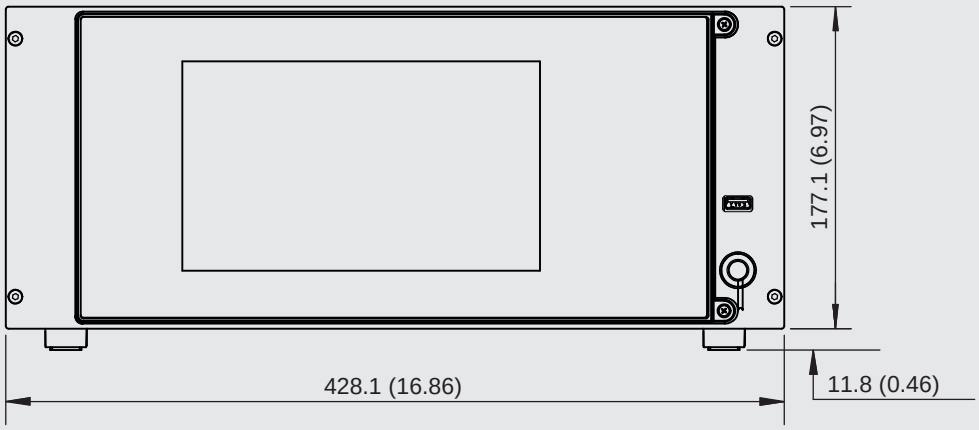

Side view (left)

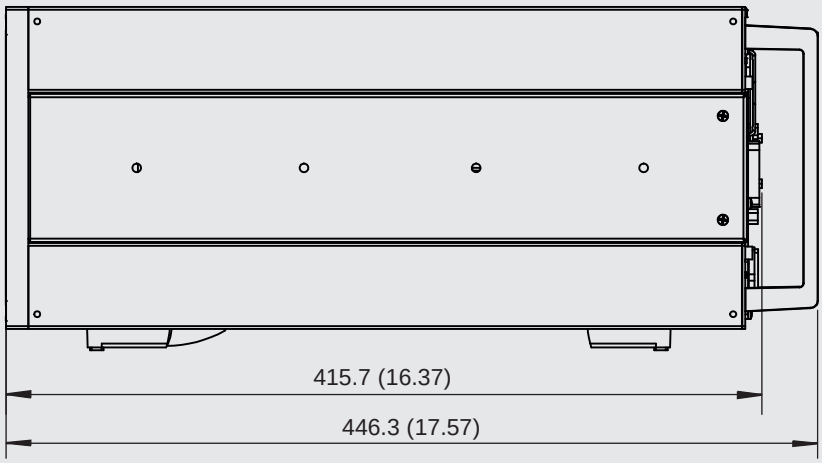

19" rack-mounting kit with side panels, front view

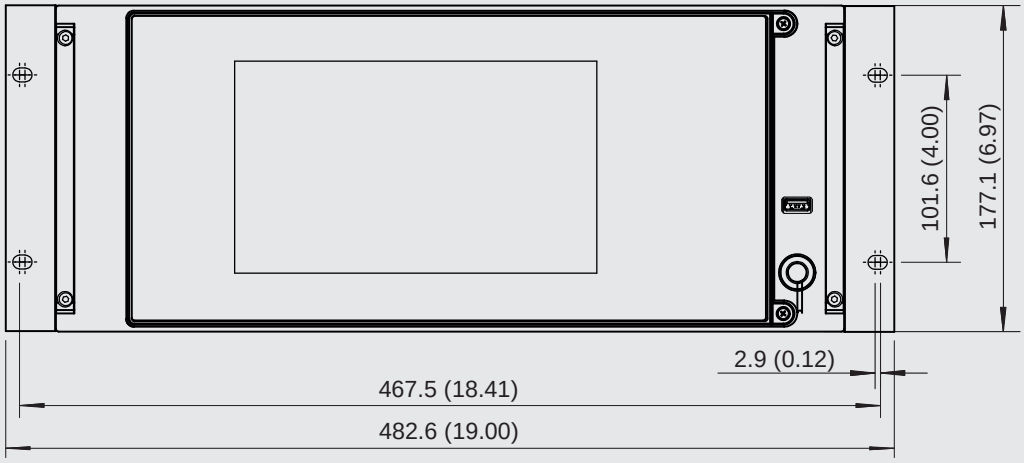

ICS Schneider Messtechnik GmbH
Briesestraße 59
D-16562 Hohen Neuendorf / OT Bergfelde
Tel.: 03303 / 504066
Fax: 03303 / 504068
info@ics-schneider.de
www.ics-schneider.de

Electrical and pressure connections - rear view

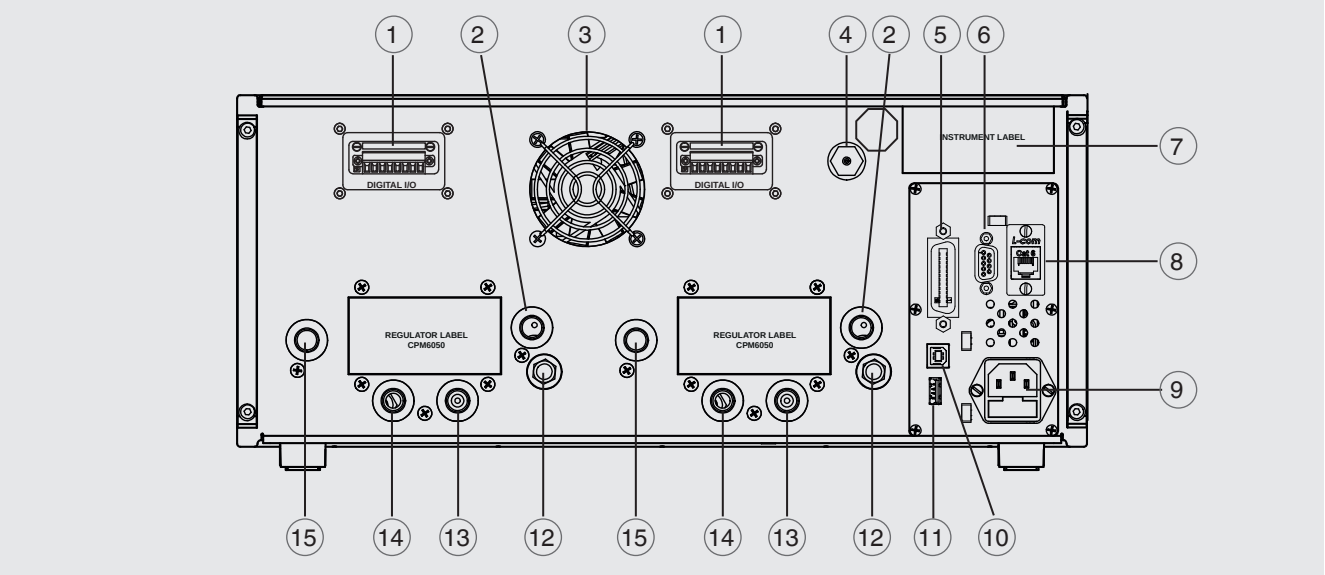

1. Digital I/O or automatic CPS connector
2. Exhaust port (7/16-20 UNF)
3. Fan
4. Barometric reference port (10-32 UNF)
5. IEEE-488 interface
6. RS-232 interface
7. Instrument label
8. Ethernet port
9. Power supply
10. USB interface (instrument) for remote communication
11. USB interface (host) for service
12. Vent (ATM)
13. Reference port (7/16-20 UNF)
14. Measure/Control port (7/16-20 UNF)
15. Supply port (7/16-20 UNF)

ICS Schneider Messtechnik GmbH
Briesestraße 59
D-16562 Hohen Neuendorf / OT Bergfelde
Tel.: 03303 / 504066
Fax: 03303 / 504068
info@ics-schneider.de
www.ics-schneider.de

Modular design of the CPC6050

Up to two independent control channels
The model CPC6050 provides a high degree of flexibility by having two independent channels of operation within one instrument. This enables the user to perform two separate calibrations at the same time. The user can also perform delta function on the two channels to see the differential pressure. Each channel is equipped with its own pressure module and up to two pressure sensors.

The CPC6050 offers two different types of pressure modules, SVR module and LPPump module. The SVR modules are based on a special solenoid valve regulation technology and provide precise control over the set pressure. These are available in four different variations depending on the pressure range. The innovative low-pressure pump module (LPPump) allows pressure generation and control at very low pressures without the need of any external pressure source, thus making CPC6050 a complete solution.

Up to four pressure sensors
Each independent channel can contain up to two internal pressure sensors and utilise the instrument's removable barometric reference for pressure mode emulation. Each sensor contains its calibration, characterisation and communication functions and information. Each channel can be equipped either with two gauge or two absolute pressure sensors, thus providing the user a control range turndown of 20:1 per channel of the instrument.
An optional calibration kit is available to calibrate the pressure sensors externally.

Auto-channelling and auto-ranging capability
The model CPC6050 modular pressure controller is capable of automatically selecting the sensor within a channel depending on the user's pressure set point. The transition between sensors is automatic and seamless without any interruption in the user's application.
Additionally the CPC6050 is also available as a single output option, thus allowing the user to access the two channels of the instrument together as a single channel. The transition between the two channels is automatic and provides the user a very stable control over a wide dynamic pressure range. The maximum control range turndown is as high as 400:1 between the full scale value of the lowest and highest sensor.

Extremely easy to maintain
The modular design of the CPC6050 provides easy access and quick replacement of pressure sensors. The sensors can be replaced by opening the front panel in just 30 seconds and the control channels can be replaced in less than 5 minutes. These features make the instrument very easy to service and repair with least possible downtime to the user.

SVR pressure module equipped with up to two sensors

LPPump module equipped with up to two sensors

Modular design of the hardware

ICS Schneider Messtechnik GmbH
Briesestraße 59
D-16562 Hohen Neuendorf / OT Bergfelde
Tel.: 03303 / 504066
Fax: 03303 / 504068
info@ics-schneider.de
www.ics-schneider.de

Easy operation via touchscreen

Shortly after power-up, the standard home screen (see following picture) is displayed. In this menu screen, one can switch between the operating modes using the buttons **MEASURE** (13), **CONTROL** (12) and **VENT** (11) at the bottom of the screen.

Standard desktop / home screen

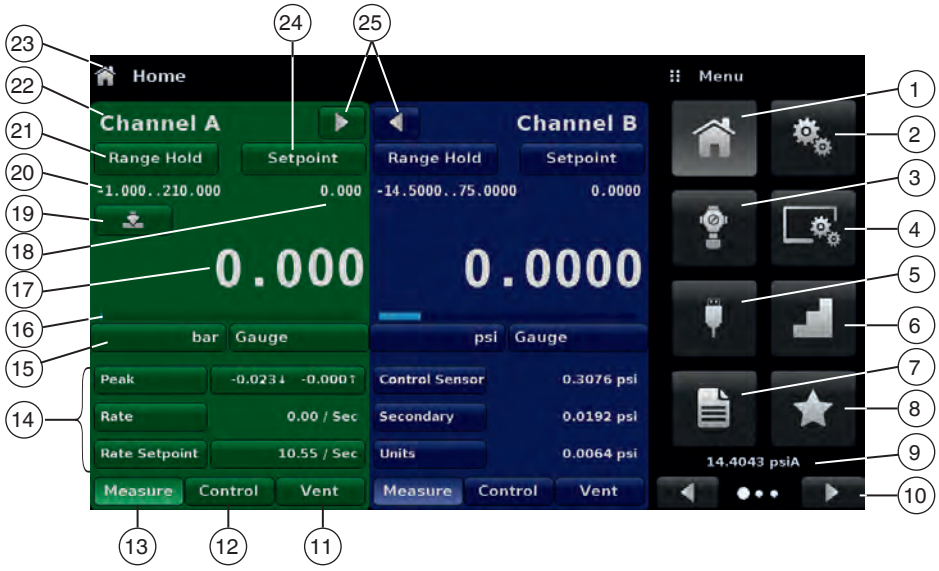

(1) Home application

(2) General settings

(3) Control settings

(4) Display settings

(5) Remote settings

(6) Step settings

(7) Sequences settings

(8) Favourites

(9) Barometric pressure reading (optional)

(10) Navigation within the menu

(11) **VENT**
Immediately vents the system, including the test assembly connected to the Measure/Control port, to atmosphere.

(12) **CONTROL**
In control mode the instrument provides a highly accurate pressure at the Measure/Control port of the respective channel in accordance with the desired set point.

(13) **MEASURE**
In measure mode, the pressure present at the Measure/Control port is measured with high accuracy (if you switch directly from **CONTROL** to **MEASURE** mode, the last controlled pressure in the connected test assembly will be maintained/locked). Temperature changes or external leakage may impact the pressure reading in this state.

(14) Auxiliary displays with either uncertainty, pressure mode, peak, rate or alternate units

(15) Current pressure unit and mode

(16) Optional bar graph

(17) Current measuring value

(18) Entered set point

(19) Zero/tare function

(20) Pressure range of the sensors

(21) Selection of the active sensor or auto-range

(22) Active channel

(23) Current application name

(24) Set-point selection

(25) Screen collapse/expand

ICS Schneider Messtechnik GmbH
Briesestraße 59
D-16562 Hohen Neuendorf / OT Bergfelde
Tel.: 03303 / 504066
Fax: 03303 / 504068
info@ics-schneider.de
www.ics-schneider.de

WIKA-Cal calibration software

Easy and fast creation of a high-quality calibration certificate

The WIKA-Cal calibration software is used for generating calibration certificates or logger protocols for pressure measuring instruments and is available as a demo version for a cost-free download.
A template helps the user and guides him through the creation process of a document.
In order to switch from the demo version to a full version of the respective template, a USB stick with the template has to be purchased.
The pre-installed demo version automatically changes to the selected full version when the USB stick is inserted and is available as long as the USB stick is connected to the computer.

- Creation of calibration certificates for mechanical and electronic pressure measuring instruments
- Fully automatic calibration with pressure controllers
- Calibration of gauge pressure measuring instruments with absolute pressure references and vice versa
- A calibration assistant guides you through the calibration
- Automatic generation of the calibration steps
- Generation of 3.1 certificates per DIN EN 10204
- Creation of logger protocols
- User-friendly interface
- Languages: German, English, Italian and more due with software updates

For further information see data sheet CT 95.10

Calibration certificates can be created with the Cal-Template and logger protocols can be created with the Log-Template.

Cal Demo
Generation of calibration certificates limited to 2 measuring points, with automatic initiation of pressures via a pressure controller.

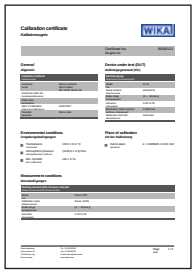

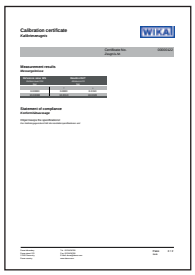

Cal Light
Generation of calibration certificates with no limitations on measuring points, without automatic initiation of pressures via a pressure controller.

Cal
Generation of calibration certificates with no limitations on measuring points, with automatic initiation of pressures via a pressure controller.

Log Demo
Creation of data logger test reports, limited to 5 measured values.

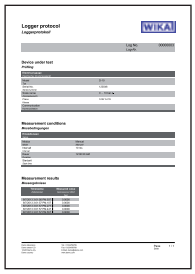

Log
Creation of data logger test reports without limiting the measured values.

ICS Schneider Messtechnik GmbH
Briesestraße 59
D-16562 Hohen Neuendorf / OT Bergfelde
Tel.: 03303 / 504066
Fax: 03303 / 504068
info@ics-schneider.de
www.ics-schneider.de

Scope of delivery

- Modular pressure controller model CPC6050 (desktop case)
- 1.5 m (5 ft) power cord
- Operating instructions
- A2LA calibration certificate (standard on factory)

Accessories

- Pressure adapters
- Interface cable
- Coalescing filter
- Block and bleed valve
- Pressure booster
- WIKA-Cal calibration software

Options

- DKD/DAkkS calibration certificate
- Barometric reference
- Spare reference pressure sensor
- Spare pressure module
- 19" rack-mounting kit
- Customer-specific system
- Adapters and fittings for pressure connections
- Digital I/O
- Automatic contamination prevention system
- Single output / auto range or dual channel version

Ordering information

Model / Case type / Channel A: Pressure controller module / Channel B: Pressure controller module / Barometric reference / Type of certificate for barometric reference / Delta function for 2-channel versions / Single output for 2-channel versions / Power cord / Additional ordering information

© 10/2015 WIKA Alexander Wiegand SE & Co. KG, all rights reserved.
The specifications given in this document represent the state of engineering at the time of publishing.
We reserve the right to make modifications to the specifications and materials.

ICS Schneider Messtechnik GmbH
Briesestraße 59
D-16562 Hohen Neuendorf / OT Bergfelde

Tel.: 03303 / 504066
Fax: 03303 / 504068

info@ics-schneider.de
www.ics-schneider.de