High-quality pressure sensor with mounted diaphragm seal With threaded connection, threaded design Model DSS10T

Applications

- For aggressive, hot, corrosive, environmentally hazardous or toxic media
- Chemical and petrochemical industries
- Harsh environments in the process industry

Special features

- Process connection with thread for direct threaded connection
- Version with internal diaphragm
- Diaphragm seal parts screwed together
- Universal application

Diaphragm seal system, model DSS10T

Description

Diaphragm seal systems are used to protect the pressure measuring instrument from aggressive, adhesive, crystallising, corrosive, highly viscous, environmentally hazardous or toxic media. The diaphragm made of stainless steel provides for the separation from the medium. The pressure is transmitted to the measuring instrument via the system fill fluid which is inside the diaphragm seal system.

Due to its design, the DSS10T can be used universally. A replacement of the lower body is possible (e.g. when changing the process connection) without having to carry out modifications on the diaphragm seal system.

The DSS10T is ideally suited for demanding measuring tasks and achieves a very high accuracy. It is characterised by its robust design and can be used for a multitude of applications.

Mounting of the diaphragm seal to the measuring instrument is made via direct mounting as standard.

The DSS10T is particularly well suited for aggressive or hot media. This instrument is mainly geared to applications in the process industry.

Specifications

Model DSS10T	
Design	High-quality pressure sensor, welded to diaphragm seal, threaded design
Current output	4 ... 20 mA (2-wire)
Power supply	DC 8 ... 35 V
Accuracy at reference conditions	≤ ±0.5 % of span
Permissible load in Ω	Current output ≤ (power supply - 7.5 V) / 0.023 A
Current supply	Max. 25 mA
Dissipation loss	828 mW
Reference conditions (per IEC 61298-1)	Temperature: 15 ... 25 °C [59 ... 77 °F] Atmospheric pressure: 860 ... 1,060 mbar [12.5 ... 15.4 psi] Humidity: 45 ... 75 % r. h. Power supply: DC 24 V Mounting position: Calibrated in vertical mounting position with pressure connection facing downwards.
Pressure limitation	< 10 bar [150 psi]: 3 times ≥ 10 bar [150 psi]: 2 times
Permissible temperature range Medium Ambient Storage	 -10 ... 150 °C [14 ... 302 °F] 10 ... 40 °C [50 ... 104 °F] 10 ... 60 °C [50 ... 140 °F]
Ingress protection	IP65 per IEC/EN 60529
Material wetted non-wetted	 Diaphragm: Stainless steel 1.4435 [316L] or Hastelloy C276 Diaphragm seal: Stainless steel 1.4435 [316L] Case: Stainless steel 1.4571 [316Ti] Zero adjustment ring: PBT/PET GF30 Angular connector: PBT/PET GF30
Level of cleanliness of wetted parts	Oil and grease free per ASTM G93-03 level F (WIKA standard) and ISO 15001 (< 1,000 mg/m^2)
System fill fluid	Silicone oil KN 2 for general applications
Transport conditions	Maximum humidity (per IEC 68-2-78): 67 % r. h. at 40 °C [104 °F] (in accordance with 4K4H per EN 60721-3-4)

Measuring ranges in bar [psi]

Gauge pressure				
0 ... 1 [0 ... 15]	0 ... 1.6 [0 ... 25]	0 ... 2.5 [0 ... 40]	0 ... 4 [0 ... 60]	0 ... 6 [0 ... 100]
0 ... 10 [0 ... 160]	0 ... 16 [0 ... 250]	0 ... 25 [0 ... 400]	0 ... 40 [0 ... 600]	0 ... 60 [0 ... 1,000]

Vacuum and +/- measuring range		
-1 ... +5 [-30 inHg ... +70]	-1 ... +9 [-30 inHg ... +130]	-1 ... +10 [-30 inHg ... +145]

Electrical connection

Angular connector DIN 175301-803 A				
Electrical connection	**Ingress protection 1)**	**Wire cross-section**	**Cable ∅**	**Permissible temperature**
with mating connector	IP65	max. 1.5 mm²	6 ... 8 mm	-30 ... +100 °C [-22 ... +212 °F]

1) Only applies when plugged in using a suitable mating connector that has the appropriate ingress protection.

Connection diagram

Angular connector DIN 175301-803 A, 2-wire		
	U+	1
	U-	2

Model DSS10M illustrated on a pipe socket

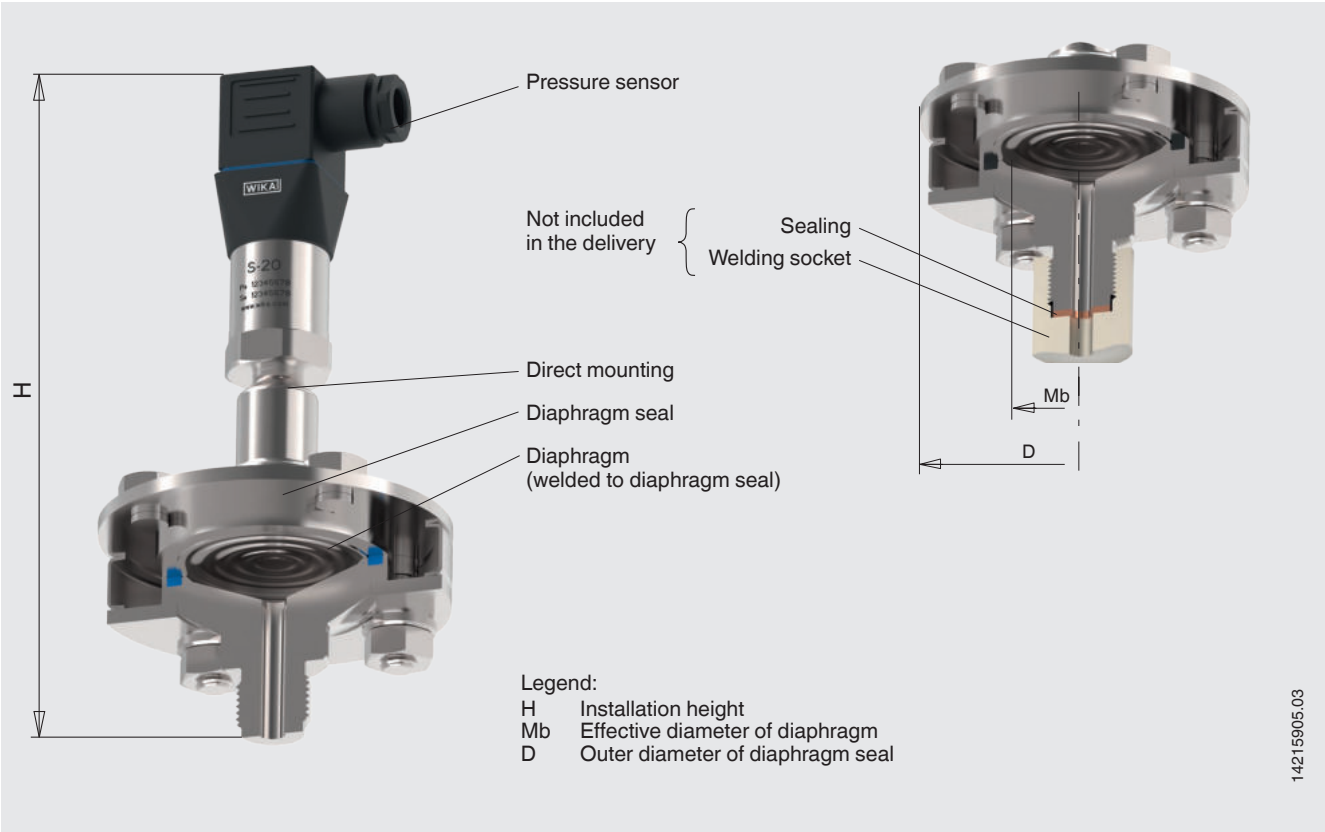

Dimensions in mm [in]

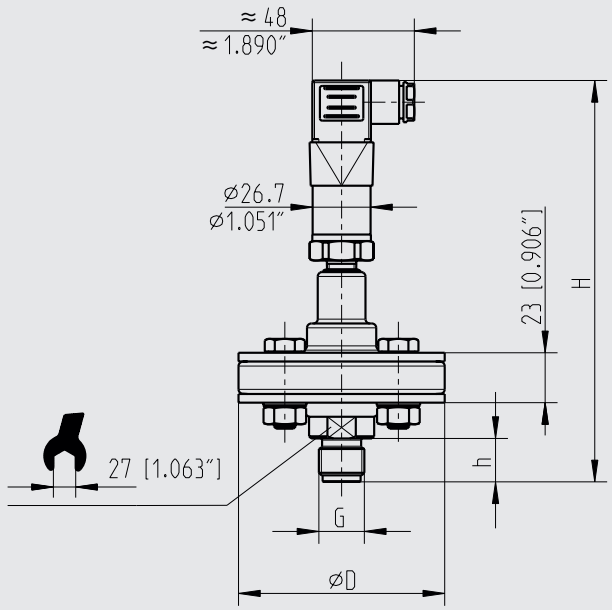

Legend:

H	Installation height
Mb	Effective diameter of diaphragm
G	Thread
D	Outer diameter of diaphragm seal
h	Thread length

Type of process connection: Threaded connection, threaded design

Wetted parts	G	Dimensions in mm [in]			
		H	D	Mb	h
Stainless steel 1.4404/1.4435 [316L]	G ½	185 [7.283]	95 [3.740]	52 [2.047]	20 [0.787]
	½ NPT	184 [7.244]			19 [0.748]
Hastelloy C276	G ½	219 [8.622]			20 [0.787]
	½ NPT	218 [8.852]			19 [0.748]

Certificates (option)

3.1 inspection certificate per EN 10204 (e.g. material proof for wetted metallic parts, calibration certificate)

Approvals and certificates, see website

Ordering information

Scale range / Process connection (type of process connection, pipe standard, pipe dimension) / Parts / Certificates

© 02/2017 WIKA Alexander Wiegand SE & Co. KG, all rights reserved.
The specifications given in this document represent the state of engineering at the time of publishing.
We reserve the right to make modifications to the specifications and materials.