Hydraulic comparison test pump
Models CPP1000-X, CPP1600-X

for further approvals see
page 2

Applications

- Calibration service companies and service industry
- Maintenance and service facilities
- For the testing, adjustment and calibration of all types of pressure measuring instruments
- Hydraulic pressure generation up to 1,600 bar (23,200 psi)

Special features

- Ergonomic handling through the smooth-running, internally operating, precision spindle
- Integrated oil reservoir
- Removable star handle
- Freely rotating test connections (i.e. measuring instruments can be aligned)
- Integrated priming pump for large test volumes

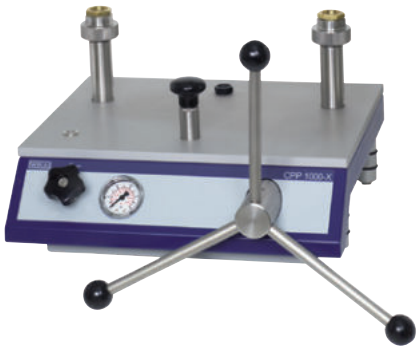

Comparison test pump, model CPP1000-X

Description

Application areas

Comparison test pumps serve as pressure generators for the testing, adjustment and calibration of mechanical and electronic pressure measuring instruments through comparative measurements. These pressure tests may be carried out in the laboratory, workshop, or on site at the measuring point.

Easy handling

For a precise approach to the measuring points, the comparison test pumps are fitted with a spindle for fine control. In particular, the smooth running of the hand spindle enables this, even at very high pressures. Furthermore, the spindles for this model range only run within the pump body. This eliminates an unfavourable bending moment on a spindle that has been unscrewed. Especially for field operation there is the advantage that dimensions of these pumps do not alter during operation through the rotation of the spindle.
With the integrated priming pump, large test volumes can be easily filled and primed for both comparison test pumps.

Easy operation

If one connects the test item and a sufficiently accurate reference measuring instrument to the test pump, on actuating the pump, the same pressure will act on both instruments. By comparison of the two measured values at any given pressure value, a check of the accuracy and/or adjustment of the pressure measuring instrument under test can be carried out.

ICS Schneider Messtechnik GmbH
Briesestraße 59
D-16562 Hohen Neuendorf / OT Bergfelde

Tel.: 03303 / 504066
Fax: 03303 / 504068

info@ics-schneider.de
www.ics-schneider.de

The models CPP1000-X and CPP1600-X have been designed around a solid base with high durability and, with the proven technology of the CPB5800 pressure balance, offer exceptional ease-of-use.
With the integrated priming pump and the 250 ml tank, large test volumes can also be easily filled and primed.

Both test connections on both pump models are fitted with quick-release connectors with knurled nuts and exchangeable threaded inserts (as standard G ½ female). Corresponding threaded inserts are available for the calibration of instruments with different connection threads.

Specifications

	CPP1000-X	CPP1600-X
Pressure range	0 ... 1,000 bar (0 ... 14,500 psi)	0 ... 1,600 bar (0 ... 23,200 psi)
Pressure transmission medium	Hydraulic fluid based on mineral oil / clean water, free of calcium-carbonate [1)]	
Reservoir	250 cm^3	
Pressure connections		
Test connection	2 x quick-release connector M28 x 1.5 female thread, incl. changeable threaded inserts (as standard G ½ female)	
Distance between test connections	300 mm (11.8 in)	
Piston of the comparison test pump		
Piston diameter	8 mm (0.3 in)	
Displacement per revolution	approx. 0.1 cm^3	
Overall displacement	approx. 3.9 cm^3	
Material		
Cylinder	Brass	
Piston	Stainless steel	
Piping	1.4404 stainless steel, 6 x 2 mm (0.2 x 0.1 in)	
Rear flange	Aluminium	
Sealings	FKM, NBR (standard), optional EPDM [2)]	
Permissible operating temperature	18 ... 28 °C (64 ... 82 °F)	
Instrument base		
Stationary mounting	Stable base	
Dimensions (L x W x H)	400 x 375 x 265 mm (15.8 x 14.8 x 10.4 in)	
Weight	20 kg (44.1 lbs.)	

1) Other pressure transmission media on request.
2) Using the EPDM variant (for aggressive media), Skydrol® or brake fluid is permissible as pressure transmission medium.

Approvals

Logo	Description	Country
CE	**EU declaration of conformity for model CPP1600-X** Pressure equipment directive (PS > 1,000 bar; module A, pressure accessory)	European Union
EAC	**EAC** Machinery directive	Eurasian Economic Community
-	**MTSCHS** Permission for commissioning	Kazakhstan

Approvals and certificates, see website

Dimensions in mm (in)

Front view

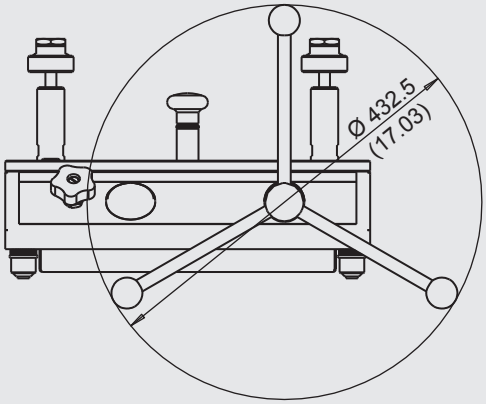

Side view (left)

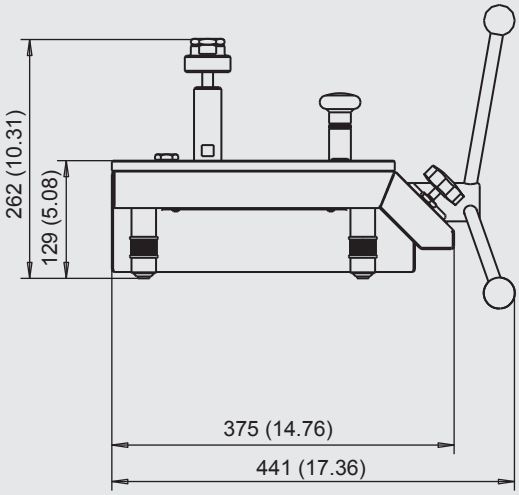

Top view

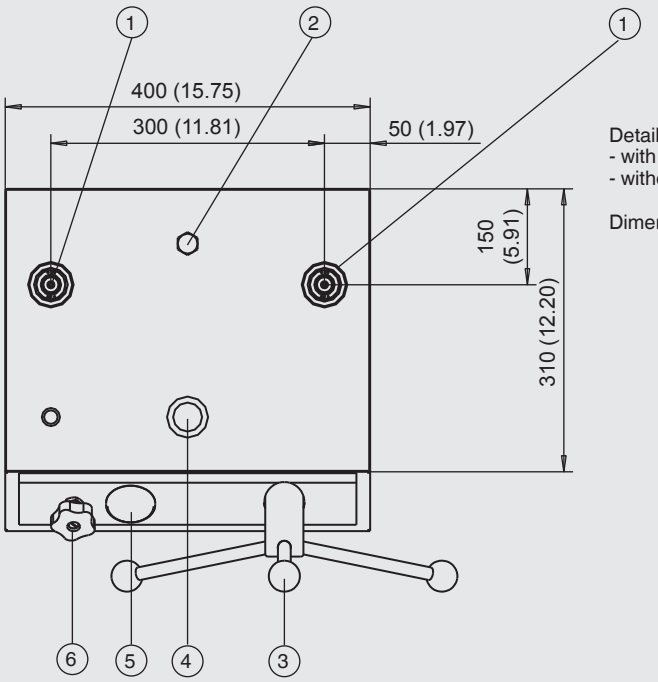

Detailed section view model CPP1600-X
- with high-pressure shut-off valve
- without pressure gauge

Dimensions are identical.

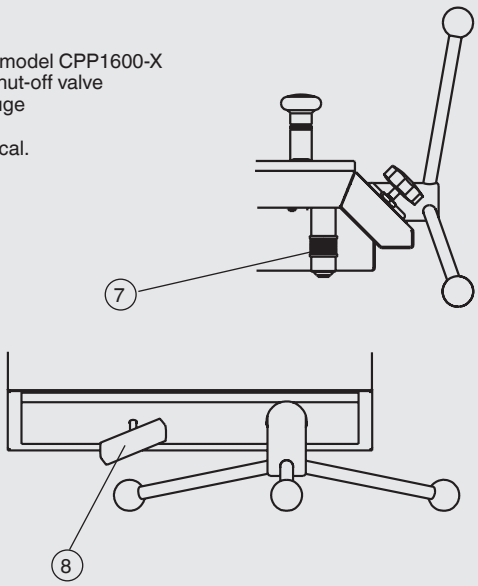

① Test connections; quick-release connector
M28 x 1.5 female incl. changeable threaded inserts
G ½ female

② Plug screw for medium reservoir

③ Spindle pump with star handle

④ Priming pump

⑤ Test pressure gauge (only CPP1000-X)

⑥ Shut-off valve 1,000 bar (14,500 psi)

⑦ Rotatable feet

⑧ High-pressure shut-off valve 1,600 bar (23,200 psi)

Recommended reference pressure measuring instruments

Precision digital pressure gauge model CPG1500

Measuring ranges: to 10,000 bar (150,000 psi)
Accuracy: to 0.025 % of span

For further specifications see data sheet CT 10.51

Hand-held pressure indicator model CPH6300

Measuring ranges: to 1,000 bar (14,500 psi)
Accuracy: to 0.1 % of span

For further specifications see data sheet CT 12.01

Precision hand-held pressure indicator model CPH6400

Measuring ranges: to 7,000 bar (101,500 psi)
Accuracy: to 0.025 % of span

For further specifications see data sheet CT 14.01

Process calibrator model CPH6000

Measuring ranges: to 6,000 bar (87,000 psi)
Accuracy: to 0.025 % of span

For further specifications see data sheet CT 15.01

Calibration software

WIKA-Cal calibration software for creating calibration certificates or logger protocols

For specifications see data sheet CT 95.10

Similar products

Hydraulic hand spindle pump models CPP1000-M and CPP1000-L

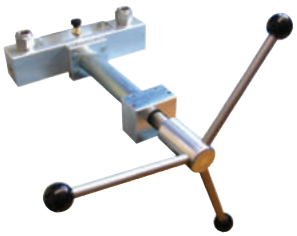

Pressure range: to 1,000 bar (14,500 psi)
Transmission medium: Oil or water

For further specifications see data sheet CT 91.05

Hydraulic comparison test pump model CPP1200-X

Pressure range: to 1,200 bar (23,200 psi)
Transmission medium: Oil or water

For further specifications see data sheet CT 91.08

Accessories

Accessories for CPP1000-X		Order code
	Description	CPP-A-8
	Hydraulic fluid based on VG22 mineral oil in plastic bottle, content 1 litre	-80-
	O-ring set consisting of 10 replacement seals (8 x 2) for the test connections, mat.: NBR	-81-
	consisting of 10 replacement seals (8 x 2) for the test connections, mat.: EPDM	-82-
	Maintenance set standard version for hydraulic volume adjuster	-83-
	EPDM version for hydraulic volume adjuster	-84-
	Sealing and maintenance set standard version for instrument base (without volume adjuster)	-85-
	EPDM version for instrument base (without volume adjuster)	-86-
	Adapter set for quick-release connector in case with G ¼, G ⅜, ½ NPT, ¼ NPT and M20 x 1.5 female, mat.: Stainless steel	-87-
	"NPT" for quick-release connector in case with ⅛ NPT, ¼ NPT, ⅜ NPT and ½ NPT female, mat.: Stainless steel	-88-
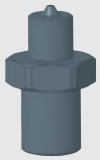	**Adapter** for connection column, G ½ male to M16 x 1.5 male with sealing cone, mat.: Stainless steel	-89-
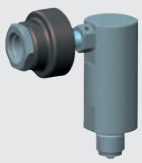	**Angle connection 90°** for test items with back mounting connection, NBR sealing	-8A-
	Replacement seal set standard version for needle valve	-8B-
	EPDM version for needle valve	-8C-
Ordering information for your enquiry:		
	1. Order code: CPP-A-8 **2. Option:**	⇓ **[ ]**

Accessories for CPP1600-X		Order code
	Description	**CPP-A-A**
	Hydraulic fluid based on VG22 mineral oil in plastic bottle, content 1 litre	-A1-
	O-ring set consisting of 10 replacement seals (8 x 2) for the test connections, mat.: NBR	-A2-
	Maintenance set for hydraulic volume adjuster	-A3-
	Sealing and maintenance set for instrument base (without volume adjuster)	-A4-
	Adapter set for quick-release connector in case with G ¼, G ⅜, ½ NPT, ¼ NPT and M20 x 1.5 female, mat.: Stainless steel	-A5-
	"NPT" for quick-release connector in case with ⅛ NPT, ¼ NPT, ⅜ NPT and ½ NPT female, mat.: Stainless steel	-A6-
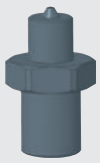	**Adapter** for connection column, G ½ male to M16 x 1.5 male with sealing cone, mat.: Stainless steel	-A7-
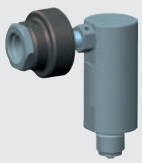	**Angle connection 90°** for test items with back mounting connection	-A8-
Ordering information for your enquiry:		
	1. Order code: CPP-A-A **2. Option:**	⇓ **[ ]**

Scope of delivery

- Comparison test pump with priming pump for filling, spindle pump for pressure generation and fine pressure adjustment
- Two test connections with quick-release connector M28 x 1.5 female incl. changeable threaded inserts G ½ female
- Operating instructions

Ordering information

CPP1000-X / Medium / Adapter set / Angle connection / Additional ordering information

CPP1600-X / Medium / Adapter set / Angle connection / Additional ordering information

© 08/2018 WIKA Alexander Wiegand SE & Co. KG, all rights reserved.
The specifications given in this document represent the state of engineering at the time of publishing.
We reserve the right to make modifications to the specifications and materials.

ICS Schneider Messtechnik GmbH
Briesestraße 59
D-16562 Hohen Neuendorf / OT Bergfelde

Tel.: 03303 / 504066
Fax: 03303 / 504068

info@ics-schneider.de
www.ics-schneider.de