SCHNEIDER
MESSTECHNIK

Gas density monitor
With Modbus® output
Model GDM-100-TI-D

Applications

- Gas density monitoring in closed SF_6 gas tanks
- Remote monitoring of the SF_6 condition

Special features

- Ideally suited for Smart Grid or modernisation projects
- On-site display with switch contacts and Modbus® output
- Modbus® delivers measured values for pressure, temperature and gas density
- Compact design with only one process connection
- Precision sensors enable high-accuracy gas density determination

Gas density monitor, model GDM-100-TI-D with Modbus® output

Description

Gas density is a crucial operating parameter for high-voltage switchgear. If the required gas density is not present, safe operation of the plant cannot be guaranteed.

The gas density measuring instruments from WIKA warn reliably against dangerously low gas quantities, even under extreme environmental conditions. If the gas density drops as a result of a leakage, the switch contacts will switch. In addition to the traditional gas density monitor, with the model GDM-100-TI-D with Modbus® output, high-precision sensors and evaluation electronics are incorporated.

Numerous fields of application
The GDM-100-TI-D only requires one connection to the measuring point to determine the pressure, temperature and gas density.

Via the on-site display, the pressure related to 20 °C can be read directly on the instrument. With the integrated switch contacts, simple switching tasks can be realised quickly and without complication. The integrated Modbus® sensors enable remote monitoring of the plant.

Remote monitoring with Modbus®
The measured data for pressure, temperature and gas density are transmitted using the standardised Modbus® RTU protocol. The advantages of this digital fieldbus are reduced cabling costs and very detailed measured data.

The GDM-100-TI-D delivers continuous data packets to a local controller or a central control system with SCADA. There, the data packets can be saved and evaluated. The data storage enables trend analysis to be carried out, so that critical SF_6 conditions can be predicted and rectified in time. An optimisation of the maintenance strategy from time-based (TBM) to condition-based (CBM) is possible through the use of the GDM-100-TI-D.

TBM =Time Based Maintenance
CBM= Condition Based Maintenance

ICS Schneider Messtechnik GmbH
Briesestraße 59
D-16562 Hohen Neuendorf / OT Bergfelde

Tel.: 03303 / 504066
Fax: 03303 / 504068

info@ics-schneider.de
www.ics-schneider.de

Gas density monitor

Nominal size
100

Calibration pressure P_E
To customer specification

Accuracy specifications
- ±1 % at ambient temperature +20 °C
- ±2.5 % at ambient temperature -20 … +60 °C and with calibration pressure in accordance with reference isochor (reference diagram KALI-Chemie AG, Hannover, prepared by Dr. Döring 1979)

Scale range
Vacuum and overpressure range with measuring span of 1.6 ... 16 bar (with an ambient temperature of 20 °C and gaseous phase)

Permissible ambient temperature
Operation: -20 ... +60 °C (-4 ... +140 °F)
Storage: -40 ... +60 °C (-40 ... +140 °F)

Process connection
G ½ B per EN 837, lower mount
Stainless steel, Spanner flats 22 mm
Other connections on request.

Pressure element
Stainless steel, welded
Gas-tight: leak rate ≤ $1 \cdot 10^{-8}$ mbar · l / s
Test method: helium mass spectrometry

Movement
Stainless steel
Bimetal link (temperature compensation)

Dial
Aluminium
The scale range is subdivided into red, yellow and green ranges

Pointer
Aluminium, black

Case
Stainless steel, with gas filling
Gas-tight: leak rate ≤ $1 \cdot 10^{-5}$ mbar · l / s
Test method: helium mass spectrometry

Window

Selectable versions	
Option 1	Laminated safety glass
Option 2	Clear non-splintering plastic

Bezel ring
Bayonet ring, stainless steel, secured by means of 3 welding spots

Permissible humidity
≤ 90 % r. h. (non-condensing)

Ingress protection
IP65 per IEC/EN 60529

Weight
approx. 1.4 kg

High-voltage test 100 %
2 kV, 50 Hz, 1s

Switch contacts

Number of switch contacts

Selectable versions	
Option 1	1 magnetic snap-action contact
Option 2	2 magnetic snap-action contacts
Option 3	3 magnetic snap-action contacts

Switching directions

Selectable versions	
Option 1	Falling pressure
Option 2	Rising pressure

Switching functions

Selectable versions	
Option 1	Normally open
Option 2	Normally closed
Option 3	Change-over contact (max. 2 switch points)

Circuits

Selectable versions	
Option 1	Galvanically connected (not for change-over contact)
Option 2	Galvanically isolated

Switching accuracy in temperature range -20 … +60 °C
Switch point = calibration pressure P_E: As measuring span
Switch point ≠ calibration pressure P_E: Shifted parallel to calibration pressure

Switch points
Not adjustable and secured against adjustment.

Max. switching voltage
AC 250 V

Switching power
30 W / 50 VA, max. 1 A

Material of switch contacts
80 % Ag / 20 % Ni, gold-plated

Further information on magnetic snap-action contacts in data sheet AC 08.01

Sensor system with Modbus® output

Measuring ranges

Density:	0 ... 60 g/litre (8.87 bar abs. at 20 °C)
Temperature:	-40 ... +80 °C
Pressure:	0 ... 16 bar abs.
Overload safety:	up to 30 bar abs.
Pressure reference:	Absolute

Accuracy specifications

Specifications only valid for clean gaseous SF_6 gas

Density:	±0.60 %, ±0.35 g/litre (-40 ... +80 °C)
Temperature:	±1 K
Pressure:	±0.20 %, ±32 mbar (-40 ... < 0 °C)
	±0.06 %, ±10 mbar (0 ... 80 °C)

Long-term stability at reference conditions

Temperature:	≤ ±0.10 % of span/year
Pressure:	≤ ±0.05 % of span/year

Refresh rate

Density:	20 ms
Temperature:	20 ms
Pressure:	20 ms

Voltage supply U_B

DC 17 ... 30 V

Power consumption

max. 0.5 W

Electrical connection

Connection cross-section max. 2.5 mm^2
Modbus® RTU via RS-485 interface
For the configuration of the cable socket, see product label.

Functionality Modbus®

Mixture ratio of SF_6 to N_2 or CF_4 (default 100% SF_6 gas)
Customer-specific name of measuring point

Measured values with alternative units can be retrieved directly in the Modbus® registers.

- Density: g/litre, kg/m^3
- Temperature: °C, °F, K
- Pressure: mbar, Pa, kPa, MPa, psi, N/cm^2, bar (at 20 °C)

Electrical safety

Protected against reverse polarity

High-voltage test 100 %

1 kV DC, 5s

Approvals

Logo	Description	Country
CE	**EU declaration of conformity** ■ EMC directive EN 61326 emission (group 1, class B) and interference immunity (industrial application) ■ RoHS directive	European Union
EAC	**EAC** EMC directive	Eurasian Economic Community

Approvals and certificates, see website

EMC tests

- **Interference immunity per IEC 61000-4-3:**
  30 V/m (80 MHz ... 2.7 GHz)
- **Burst per IEC 61000-4-4:**
  4 kV
- **Impulse voltages per IEC 61000-4-5:**
  2 kV conductor to ground, 1 kV conductor to conductor
- **ESD per IEC 61000-4-2:**
  8 kV/15 kV, contact/air
- **High-frequency fields per IEC 61000-4-6:**
  10 V

Dimensions in mm

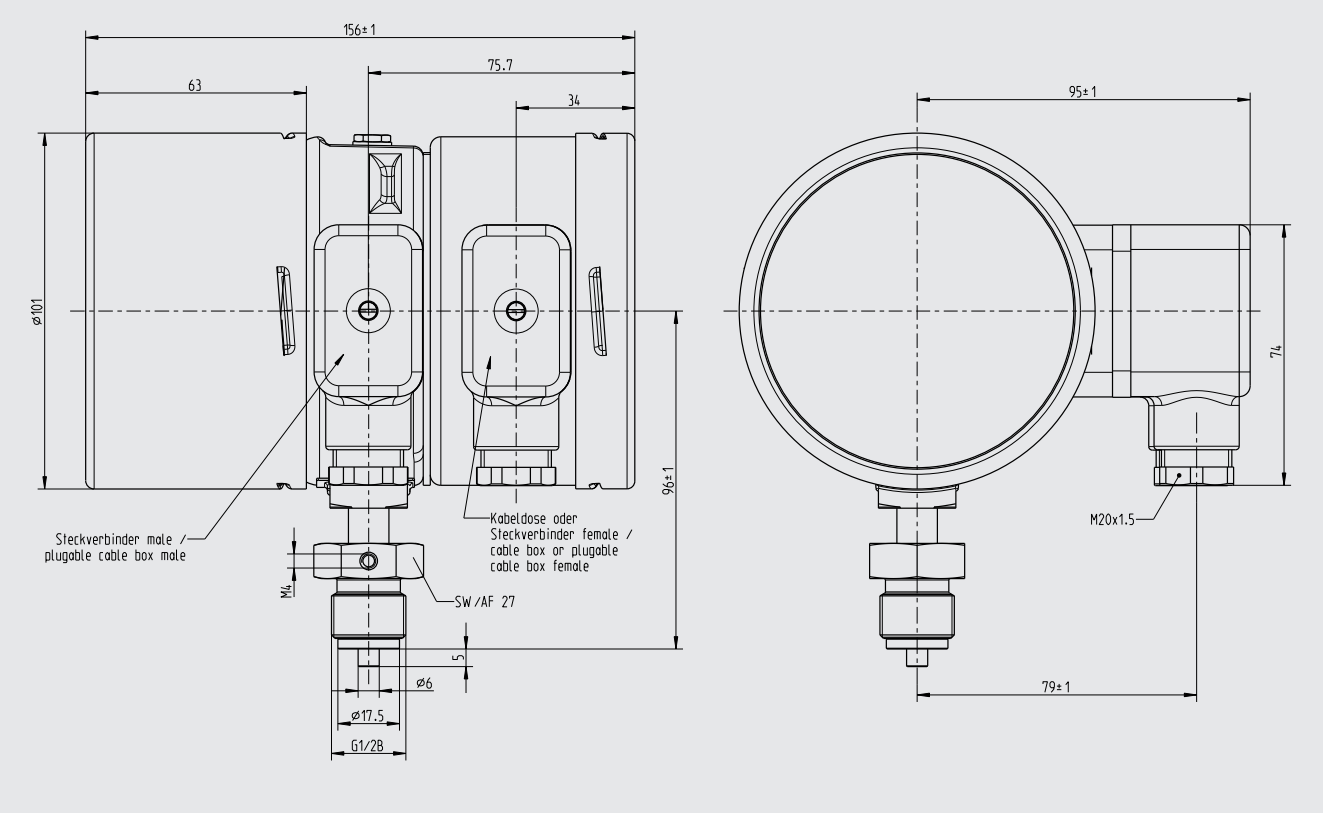

Accessories

Modbus® startup kit (Order number 14075896)
Consisting of:

- Power supply unit for transmitter
- Connection cable
- Interface converter (RS-485 to USB)
- USB cable type A to type B
- Modbus® tool software on USB stick

ICS Schneider Messtechnik GmbH
Briesestraße 59
D-16562 Hohen Neuendorf / OT Bergfelde

Tel.: 03303 / 504066
Fax: 03303 / 504068

info@ics-schneider.de
www.ics-schneider.de