Threaded thermocouple
With protection tube
Model TC10-C

for further approvals
see page 2

Applications

- Machine building, plant and vessel construction
- Energy and power plant technology
- Chemical industry
- Food and beverage industry
- Sanitary, heating and air-conditioning technology

Special features

- Sensor ranges from -40 ... +1,200 °C [-40 ... +2,192 °F]
- With integrated fabricated protection tube
- Spring-loaded measuring insert (replaceable)
- Explosion-protected versions are available for many approval types (see page 2)

Model TC10-C with protection tube

Description

Thermocouples of this series are designed for screw-fitting directly into the process, mainly in vessels and pipelines. These thermometers are suitable for liquid and gaseous media under moderate mechanical load and normal chemical conditions.

The protection tube is fully welded and screwed into the connection head. The interchangeable measuring insert can be removed without taking out the complete sensor from the plant. This enables inspection, measuring equipment monitoring or, when servicing is necessary, replacement while the plant is running. The choice of standard lengths assists with short delivery times and the possibility of stocking spare parts.

Insertion length, process connection, protection tube design, connection head, type and number of sensors, accuracy and connection method can each be selected to suit the respective application.

A large number of different explosion protection approvals are availabe for the TC10-C.

Optionally we can fit transmitters from the WIKA range into the connection head of the TC10-C.

ICS Schneider Messtechnik GmbH
Briesestraße 59
D-16562 Hohen Neuendorf / OT Bergfelde

Tel.: 03303 / 504066
Fax: 03303 / 504068

info@ics-schneider.de
www.ics-schneider.de

Explosion protection (option)

The permissible power, P_{max}, as well as the permissible ambient temperature, for the respective category can be seen on the certificate for hazardous areas or in the operating instructions.

Attention:
Only with the correspondingly suitable protective fitting is operation in dust Ex hazardous areas permissible.

Transmitters have own certificates for hazardous areas.
The permissible ambient temperature ranges of the built-in transmitters can be taken from the corresponding transmitter operating instructions and approvals.

Approvals (explosion protection, further approvals)

Logo	Description			Country
CE	**EU declaration of conformity** ■ EMC directive [1)] EN 61326 emission (group 1, class B) and interference immunity (industrial application) ■ RoHS directive			European Union
Ex	■ ATEX directive (option) Hazardous areas			
	- Ex i	Zone 0 gas	II 1G Ex ia IIC T1 ... T6 Ga	
		Zone 1 mounting to zone 0 gas	II 1/2G Ex ia IIC T1 ... T6 Ga/Gb	
		Zone 1 gas	II 2G Ex ia IIC T1 ... T6 Gb	
		Zone 20 dust	II 1D Ex ia IIIC T125 ... T65 °C Da	
		Zone 21 mounting to zone 20 dust	II 1/2D Ex ia IIIC T125 ... T65 °C Da/Db	
		Zone 21 dust	II 2D Ex ia IIIC T125 ... T65 °C Db	
	- Ex e [2)]	Zone 1 gas [3)]	II 2G Ex eb IIC T1 ... T6 Gb [4)]	
		Zone 2 gas	II 3G Ex ec IIC T1 ... T6 Gc X	
		Zone 21 dust [3)]	II 2D Ex tb IIIC TX °C Db [4)]	
		Zone 22 dust	II 3D Ex tc IIIC TX °C Dc X	
	- Ex n [2)]	Zone 2 gas	II 3G Ex nA IIC T1 ... T6 Gc X	
		Zone 22 dust	II 3D Ex tc IIIC TX °C Dc X	
IEC IECEx	**IECEx (option) - in conjunction with ATEX** Hazardous areas			International
	- Ex i	Zone 0 gas	Ex ia IIC T1 ... T6 Ga	
		Zone 1 mounting to zone 0 gas	Ex ia IIC T1 ... T6 Ga/Gb	
		Zone 1 gas	Ex ia IIC T1 ... T6 Gb	
		Zone 20 dust	Ex ia IIIC T125 ... T65 °C Da	
		Zone 21 mounting to zone 20 dust	Ex ia IIIC T125 ... T65 °C Da/Db	
		Zone 21 dust	Ex ia IIIC T125 ... T65 °C Db	
EAC Ex	**EAC (option)** Hazardous areas			Eurasian Economic Community
	- Ex i	Zone 0 gas	0Ex ia IIC T6 ... T1 Ga X	
		Zone 1 gas	1Ex ia IIC T6 ... T1 Gb X	
		Zone 20 dust	Ex ia IIIC T80 ... T440 °C Da X	
		Zone 21 dust	Ex ia IIIC T80 ... T440 °C Db X	
	- Ex n	Zone 2 gas	2Ex nA IIC T6 ... T1 Gc X	
	Ex Ukraine (option) Hazardous areas			Ukraine
	- Ex i	Zone 0 gas	II 1G Ex ia IIC T1 ... T6 Ga	
		Zone 1 mounting to zone 0 gas	II 1/2G Ex ia IIC T1 ... T6 Ga/Gb	
		Zone 1 gas	II 2G Ex ia IIC T1 ... T6 Gb	
		Zone 20 dust	II 1D Ex ia IIIC T65 °C Da	
		Zone 21 mounting to zone 20 dust	II 1/2D Ex ia IIIC T65 °C Da/Db	
		Zone 21 dust	II 2D Ex ia IIIC T65 °C Db	

Logo	Description			Country
	INMETRO (option) Hazardous areas - Ex i	Zone 0 gas Zone 1 mounting to zone 0 gas Zone 20 dust Zone 21 mounting to zone 20 dust	Ex ia IIC T3 ... T6 Ga Ex ia IIC T3 ... T6 Ga/Gb Ex ia IIIC T125 ... T65 °C Da Ex ia IIIC T125 ... T65 °C Da/Db	Brazil
	CCC (option) [4] Hazardous areas - Ex i	Zone 0 gas Zone 1 gas Zone 1 mounting to zone 0 gas Zone 2 gas Zone 20 dust Zone 21 dust Zone 21 mounting to zone 20 dust	Ex ia IIC T1 ~ T6 Ga Ex ia IIC T1 ~ T6 Gb Ex ia IIC T1 ~ T6 Ga/Gb Ex ic IIC T1 ~ T6 Gc Ex iaD 20 T65/T95/T125 °C Ex iaD 21 T65/T95/T125 °C Ex iaD 20/21 T65/T95/T125 °C	China
	KCS - KOSHA (option) Hazardous areas - Ex i	Zone 0 gas Zone 1 gas	Ex ia IIC T4 ... T6 Ex ib IIC T4 ... T6	South Korea
-	**PESO (option)** Hazardous areas - Ex i	Zone 0 gas Zone 1 mounting to zone 0 gas Zone 1 gas	Ex ia IIC T1 ... T6 Ga Ex ia IIC T1 ... T6 Ga/Gb Ex ia IIC T1 ... T6 Gb	India
	GOST (option) Metrology, measurement technology			Russia
	KazInMetr (option) Metrology, measurement technology			Kazakhstan
-	**MTSCHS (option)** Permission for commissioning			Kazakhstan
	BelGIM (option) Metrology, measurement technology			Belarus
	UkrSEPRO (option) Metrology, measurement technology			Ukraine
	Uzstandard (option) Metrology, measurement technology			Uzbekistan

1) Only for built-in transmitter
2) Only for connection head model BSZ or BSZ-H (see “Connection head”)
3) Only for insulated thermocouples
4) Without transmitter

Manufacturer‘s information and certifications

Logo	Description
	SIL 2 Functional safety (only in conjunction with model T32 temperature transmitter)
	NAMUR NE 024 Hazardous areas (Ex i)

Instruments marked with “ia” may also be used in areas only requiring instruments marked with “ib” or “ic”.
If an instrument with “ia” marking has been used in an area with requirements in accordance with “ib” or “ic”, it can no longer be operated in areas with requirements in accordance with “ia” afterwards.

Approvals and certificates, see website

Sensor

Thermocouple per IEC 60584-1 or ASTM E230
Types K, J, E, N, T (single or dual thermocouple)

Measuring point
- Ungrounded (standard)
- Grounded

Sensor types

Type	Validity limits of class accuracy			
	IEC 60584-1		ASTM E230	
	Class 2	Class 1	Standard	Special
K	-40 ... +1,200 °C	-40 ... +1,000 °C	0 ... 1,260 °C	
J	-40 ... +750 °C	-40 ... +750 °C	0 ... 760 °C	
E	-40 ... +900 °C	-40 ... +800 °C	0 ... 870 °C	
N	-40 ... +1,200 °C	-40 ... +1,000 °C	0 ... 1,260 °C	
T	-40 ... +350 °C		0 ... 370 °C	

The table shows the temperature ranges listed in the respective standards, in which the tolerance values (class accuracies) are valid.

The actual operating temperature of the thermometers is limited both by the maximum permissible working temperature and the diameter of the thermocouple and the MI cable, as well as by the maximum permissible working temperature of the thermowell material.

For detailed specifications for thermocouples, see IEC 60584-1 or ASTM E230 and Technical information IN 00.23 at www.wika.com.

Tolerance value
For the tolerance value of thermocouples, a cold junction temperature of 0 °C has been taken as the basis.

Electrical connection

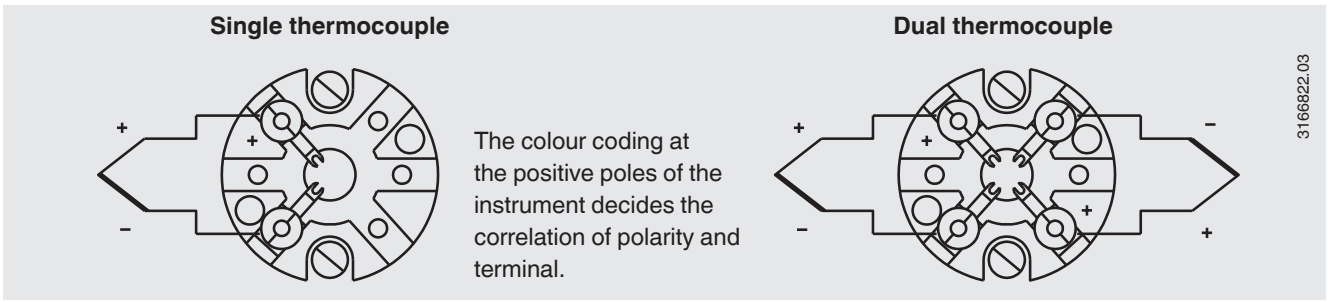

The colour coding at the positive poles of the instrument decides the correlation of polarity and terminal.

For the electrical connections of built-in temperature transmitters see the corresponding data sheets or operating instructions.

Connection head

■ European designs per EN 50446 / DIN 43735

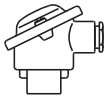

BS

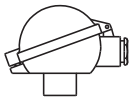

BSZ, BSZ-K

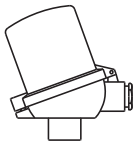

BSZ-H, BSZ-HK, BSZ-H / DIH10

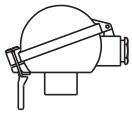

BSS

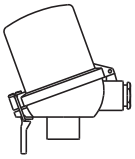

BSS-H

BVS

Model	Material	Cable entry thread size	Ingress protection (max) [1] IEC/EN 60529	Cap	Surface	Connection to neck tube
BS	Aluminium	M20 x 1.5 or ½ NPT [3]	IP65 [4]	Flat cap with 2 screws	Blue, painted [5]	M24 x 1.5, ½ NPT
BSZ	Aluminium	M20 x 1.5 or ½ NPT [3]	IP65 [4]	Spherical hinged cover with cylinder head screw	Blue, painted [5]	M24 x 1.5, ½ NPT
BSZ-H	Aluminium	M20 x 1.5 or ½ NPT [3]	IP65 [4]	Raised hinged cover with cylinder head screw	Blue, painted [5]	M24 x 1.5, ½ NPT
BSZ-H (2x cable outlet)	Aluminium	2 x M20 x 1.5 or 2 x ½ NPT [3]	IP65 [4]	Raised hinged cover with cylinder head screw	Blue, painted [5]	M24 x 1.5
BSZ-H / DIH10 [2]	Aluminium	M20 x 1.5 or ½ NPT [3]	IP65	Raised hinged cover with cylinder head screw	Blue, painted [5]	M24 x 1.5, ½ NPT
BSS	Aluminium	M20 x 1.5 or ½ NPT [3]	IP65	Spherical hinged cover with clamping lever	Blue, painted [5]	M24 x 1.5, ½ NPT
BSS-H	Aluminium	M20 x 1.5 or ½ NPT [3]	IP65	Raised hinged cover with clamping lever	Blue, painted [5]	M24 x 1.5, ½ NPT
BVS	Stainless steel	M20 x 1.5 [3]	IP65	Precision-cast screw-on lid	Blank, electropolished	M24 x 1.5
BSZ-K	Plastic	M20 x 1.5 or ½ NPT [3]	IP65	Spherical hinged cover with cylinder head screw	Black	M24 x 1.5
BSZ-HK	Plastic	M20 x 1.5 or ½ NPT [3]	IP65	Raised hinged cover with cylinder head screw	Black	M24 x 1.5

Model	Explosion protection					
	Without	Ex i (gas) Zone 0, 1, 2	Ex i (dust) Zone 20, 21, 22	Ex e (gas) Zone 1, 2	Ex t (dust) Zone 21, 22	Ex nA (gas) Zone 2
BS	x	x	x	-	-	-
BSZ	x	x	x	x [6]	x [6]	x [7]
BSZ-H	x	x	x	x [6]	x [6]	x [7]
BSZ-H (2x cable outlet)	x	x	x	x [6]	x [6]	x [7]
BSZ-H / DIH10 [1]	x	x	-	-	-	-
BSS	x	x	-	-	-	-
BSS-H	x	x	-	-	-	-
BVS	x	x	-	-	-	-
BSZ-K	x	x	-	-	-	-
BSZ-HK	x	x	-	-	-	-

1) IP ingress protection of the connection head. The IP ingress protections of the complete instrument TC10-C must not inevitably correspond to the connection head.
2) LED display DIH10
3) Standard (others on request)
4) Ingress protections, which describe temporary or lasting submersion, available on request
5) RAL 5022
6) Only ATEX
7) Only ATEX and EAC-Ex

North American designs

KN4-A
KN4-P

Model	Material	Cable entry thread size	Ingress protection (max.) [1] IEC/EN 60529	Cover / Cap	Surface	Connection to neck tube
KN4-A	Aluminium	½ NPT or M20 x 1.5 [2]	IP65	Screw-on lid	Blue, painted [3]	M24 x 1.5, ½ NPT
KN4-P [4]	Polypropylene	½ NPT	IP65	Screw-on lid	White	½ NPT

Model	Explosion protection					
	Without	Ex i (gas) Zone 0, 1, 2	Ex i (dust) Zone 20, 21, 22	Ex e (gas) Zone 1, 2	Ex t (dust) Zone 21, 22	Ex nA (gas) Zone 2
KN4-A	x	x	-	-	-	-
KN4-P [4]	x	-	-	-	-	-

1) IP ingress protection of the connection head. The IP ingress protections of the complete instrument TC10-C must not inevitably correspond to the connection head.
2) Standard (others on request)
3) RAL 5022
4) On request

Connection head with digital display

Connection head BSZ-H with LED display model DIH10
see data sheet AC 80.11

To operate the digital displays, a transmitter with a 4 ... 20 mA output is always required.

Cable entry

Standard

Plastic

Brass, nickel-plated

Stainless steel

Junction box, M12 x 1 (4-pin)

Plain threaded

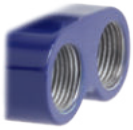

2 x plain threaded

Sealing plugs for transport

The pictures show examples of connection heads.

Cable entry	Cable entry thread size	Min./max. ambient temperature
Standard cable entry [1]	M20 x 1.5 or ½ NPT	-40 ... +80 °C
Plastic cable gland (cable Ø 6 ... 10 mm) [1]	M20 x 1.5 or ½ NPT	-40 ... +80 °C
Plastic cable gland (cable Ø 6 ... 10 mm), Ex e [1]	M20 x 1.5 or ½ NPT	-20 ... +80 °C (standard) -40 ... +70 °C (option)
Nickel-plated brass cable gland (cable Ø 6 ... 12 mm)	M20 x 1.5 or ½ NPT	-40 ... +80 °C
Stainless steel cable gland (cable Ø 7 ... 12 mm)	M20 x 1.5 or ½ NPT	-40 ... +80 °C
Plain threaded	M20 x 1.5 or ½ NPT	-
2 x M20 x 1.5 [2]	2 x M20 x 1.5	-
Junction box M12 x 1 (4-pin) [3]	M20 x 1.5	-40 ... +80 °C
Sealing plugs for transport	M20 x 1.5 or ½ NPT	-40 ... +80 °C

Cable entry	Colour	Ingress protection (max.) [4] IEC/EN 60529	Explosion protection					
			without	Ex i (gas) Zone 0, 1, 2	Ex i (dust) Zone 20, 21, 22	Ex e (gas) Zone 1, 2	Ex t (dust) Zone 21, 22	Ex nA (gas) Zone 2
Standard cable entry [1]	Blank	IP65	x	x	-	-	-	-
Plastic cable gland [1]	Black or grey	IP66 [5]	x	x	-	-	-	-
Plastic cable gland, Ex e [1]	Light blue	IP66 [5]	x	x	x	-	-	-
Plastic cable gland, Ex e [1]	Black	IP66 [5]	x	x	x	x	x	x
Nickel-plated brass cable gland	Blank	IP66 [5]	x	x	x	-	-	-
Nickel-plated brass cable gland, Ex e	Blank	IP66 [5]	x	x	x	x	x	x
Stainless steel cable gland	Blank	IP66 [5]	x	x	x	-	-	-
Stainless steel cable gland, Ex e	Blank	IP66 [5]	x	x	x	x	x	x
Plain threaded	-	IP00	x	x	x [7]	x [7]	x [7]	x [7]
2 x M20 x 1.5 [2]	-	IP00	x	x	x [7]	x [7]	x [7]	x [7]
Junction box M12 x 1 (4-pin) [3]	-	IP65	x	x [6]	x [6]	-	-	-
Sealing plugs for transport	Transparent	-	not applicable, transport protection					

1) Not available for BVS connection head
2) Only for BSZ-H connection head
3) Not available for ½ NPT thread size cable entry
4) IP ingress protection of the cable gland. The IP ingress protections of the complete instrument TC10-C must not inevitably correspond to the cable gland.
5) Ingress protections, which describe temporary or continuous immersion, available on request
6) With appropriate mating connector connected
7) Suitable cable gland required for operation

Ingress protection per IEC/EN 60529

Degrees of protection against solid foreign bodies (defined by the first index number)

First index number	Degree of protection / short description	Test parameter
5	Dust-protected	per IEC/EN 60529
6	Dust-tight	per IEC/EN 60529

Degrees of protection against water (defined by the second index number)

Second index number	Degree of protection / short description	Test parameter
4	Protected against splash water	per IEC/EN 60529
5	Protected against water jets	per IEC/EN 60529
6	Protected against strong water jets	per IEC/EN 60529
7 [1)]	Protected against the effects of temporary immersion in water	per IEC/EN 60529
8 [1)]	Protected against the effects of continuous immersion in water	by agreement

1) Ingress protections, describing temporary or permanent immersion, on request

Standard ingress protection of model TC10-C is IP65.

The stated degrees of protection apply under the following conditions:

- Use of a suitable cable gland
- Use of a cable cross-section appropriate for the gland or select the appropriate cable gland for the available cable
- Adhere to the tightening torques for all threaded connections

Transmitter

Mounting onto the measuring insert

With mounting on the measuring insert, the transmitter replaces the terminal block and is fixed directly to the terminal plate of the measuring insert.

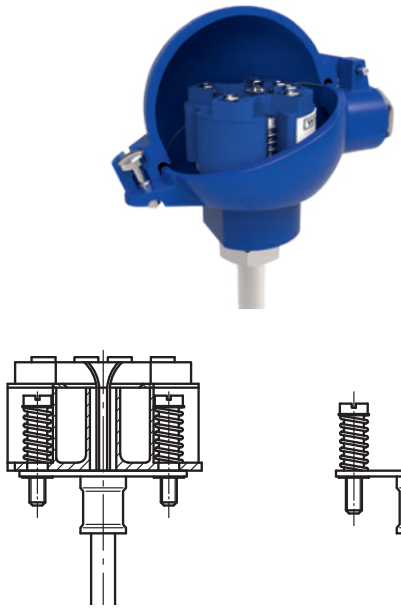

Fig. left: Measuring insert with mounted transmitter (here: model T32)
Fig. right: Measuring insert prepared for transmitter mounting

Mounted within the cap of the connection head

Mounting the transmitter in the cap of the connection head is preferable to mounting it on the measuring insert. With this type of mounting, for one, a better thermal insulation is ensured, and in addition, exchange and mounting for servicing is simplified.

Transmitter models

Output signal 4 ... 20 mA, HART® protocol		
Transmitter (selectable versions)	**Model T16**	**Model T32**
Data sheet	**TE 16.01**	**TE 32.04**
Output		
4 ... 20 mA	x	x
HART® protocol	-	x
Input		
Thermocouples IEC 60584-1	K, J, E, N, T	K, J, E, N, T
Explosion protection	Optional	Optional

Possible mounting positions for transmitters

Connection head	T16	T32
BS	○	-
BSZ, BSZ-K	○	○
BSZ-H, BSZ-HK	●	●
BSZ-H (2x cable outlet)	●	●
BSZ-H / DIH10	○	○
BSS	○	○
BSS-H	●	●
BVS	○	○
KN4-A / KN4-P	○	○

○ Mounted instead of terminal block ● Mounted within the cap of the connection head – Mounting not possible

The mounting of a transmitter on the measuring insert is possible with all the connection heads listed here. The fitting of a transmitter in the (screw) cap of a North American design connection head is not possible.
Mounting of 2 transmitters on request.
For a correct determination of the overall measuring deviation, the sensor and transmitter measuring deviations must be added.

Functional safety (option)
with temperature transmitter model T32

In safety-critical applications, the entire measuring chain must be taken into consideration in terms of the safety parameters. The SIL classification allows the assessment of the risk reduction reached by the safety installations.

Selected TC10-C thermocouples, in combination with a suitable temperature transmitter (e.g. model T32.1S, TÜV certified SIL version for protection systems developed in accordance with IEC 61508), are suitable as sensors for safety functions to SIL 2.

For detailed specifications, see Technical information IN 00.19 at www.wika.com.

Components model TC10-C

Process connection: Mounting thread, firmly welded

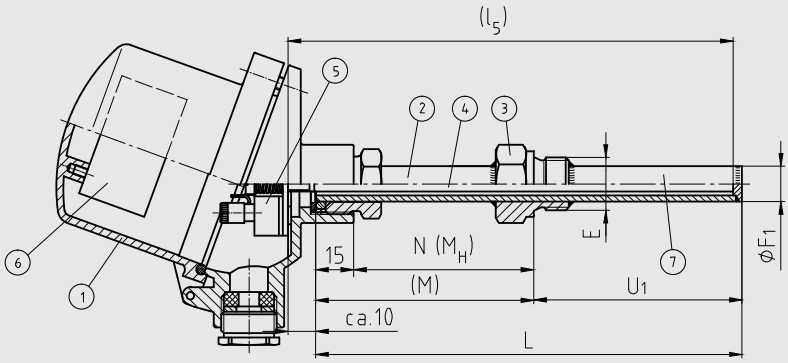

3175431.07

Process connection: Compression fitting

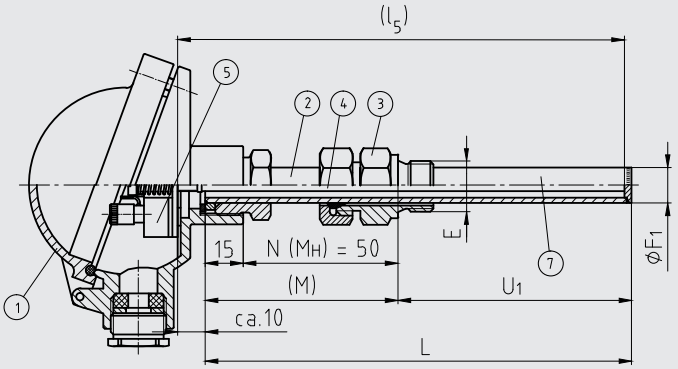

Legend:

①	Connection head	(L)	Overall length protection tube
②	Neck tube	l_5	Measuring insert length
③	Process connection	U_1	Protection tube insertion length per DIN 43772
④	Measuring insert (TC10-A)	Ø F_1	Protection tube diameter
⑤	Terminal block/transmitter (option)	E	Mounting thread
⑥	Transmitter (option)	N (M_H)	Neck length
⑦	Protection tube	(M)	Neck tube length

Fig. with parallel or tapered thread see chapter “Protection tube”

Protection tube

Protection tube designs

Protection tube, straight, mounting thread, form 2G DIN 43772

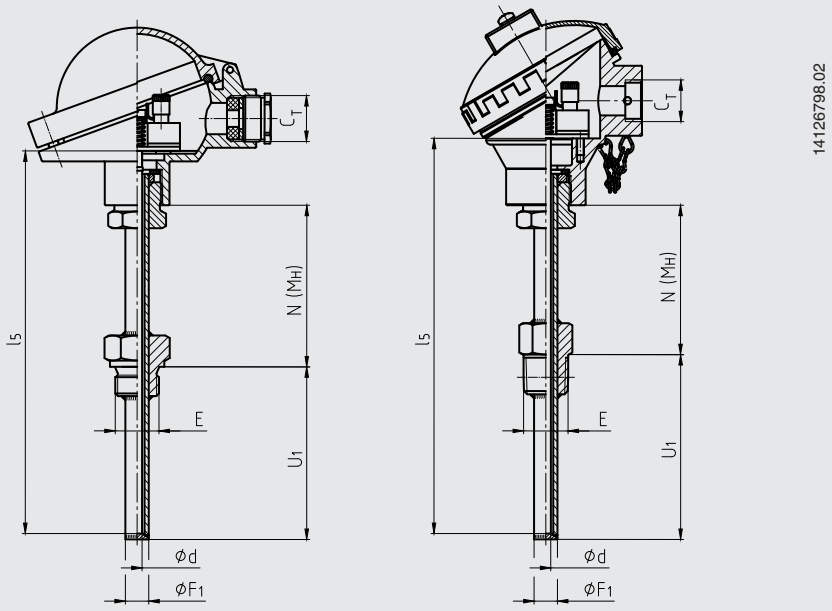

Protection tube, straight, plain, form 2 DIN 43772, with/without compression fitting

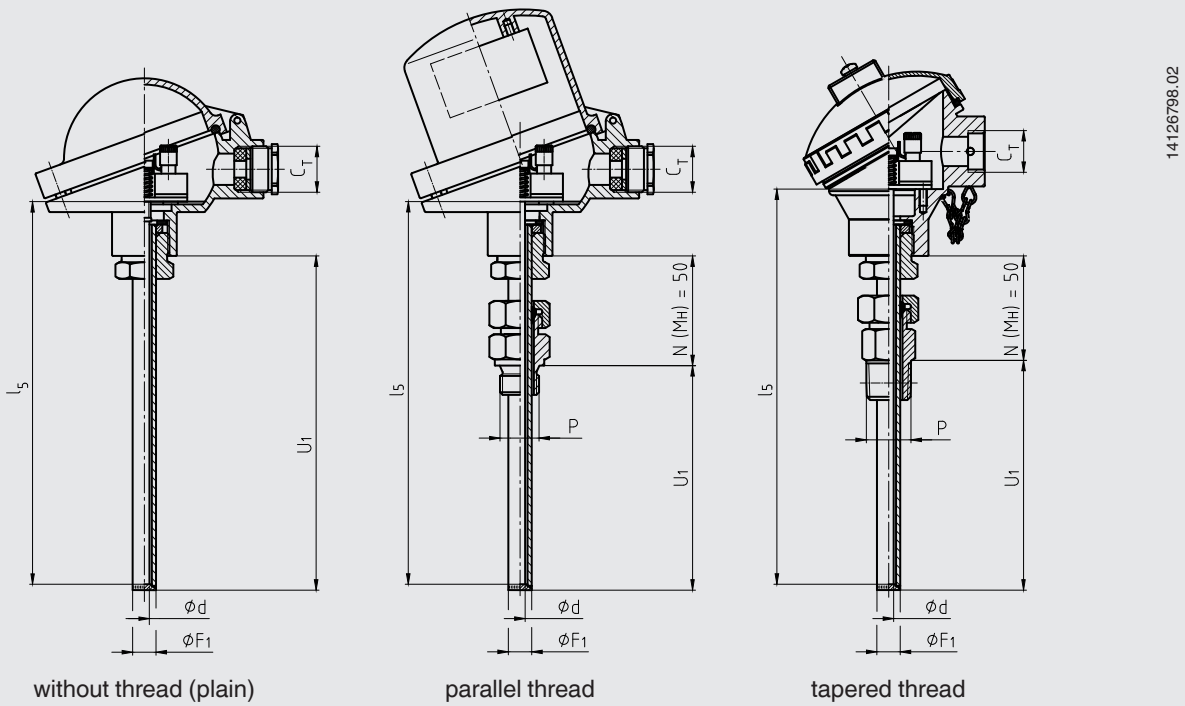

Legend:

U_1	Insertion length	Ø F_1	Protection tube diameter
l_5	Measuring insert length	E	Mounting thread
N (M_H)	Neck length	Ø d	Measuring insert diameter
C_T	Thread cable entry	P	Compression fitting mounting thread

The pictures show examples of connection heads.

Protection tube, tapered, mounting thread, form 3G DIN 43772

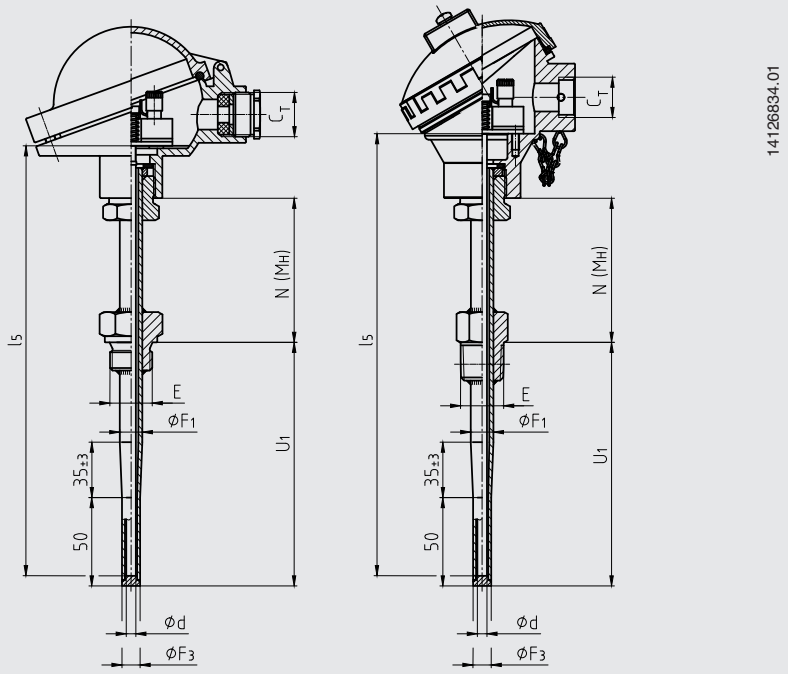

parallel thread tapered thread

Protection tube, tapered, plain, form 3 DIN 43772, with/without compression fitting

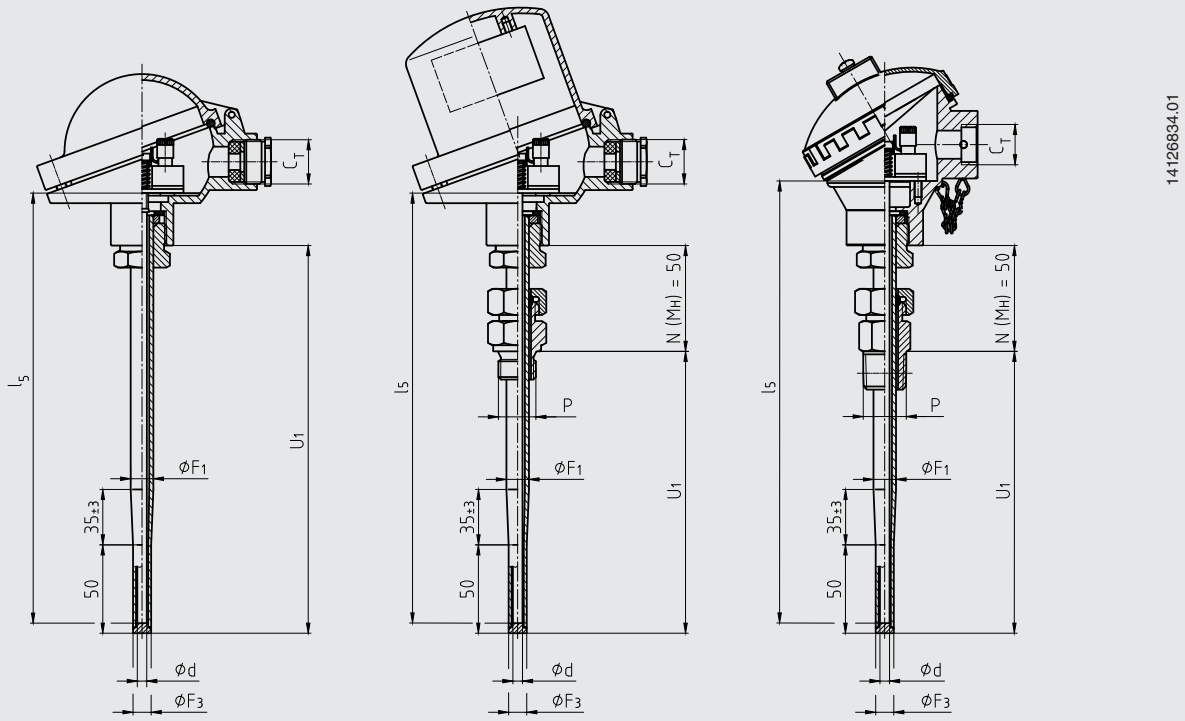

without thread (plain) parallel thread tapered thread

Legend:

U_1	Insertion length	Ø F_3	Diameter of protection tube tip
l_5	Measuring insert length	E	Mounting thread
N (M_H)	Neck length	Ø d	Measuring insert diameter
C_T	Thread cable entry	P	Compression fitting mounting thread
Ø F_1	Protection tube diameter		

The pictures show examples of connection heads.

Protection tube, tapered, weld-on solid tip, mounting thread, non-standard design

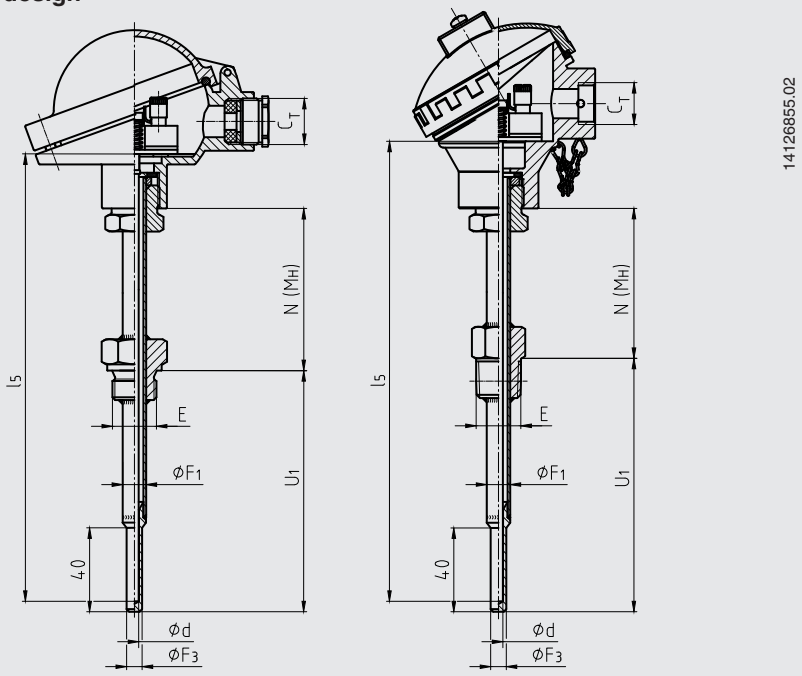

parallel thread tapered thread

Protection tube, tapered, weld-on solid tip, plain, with/without compression fitting

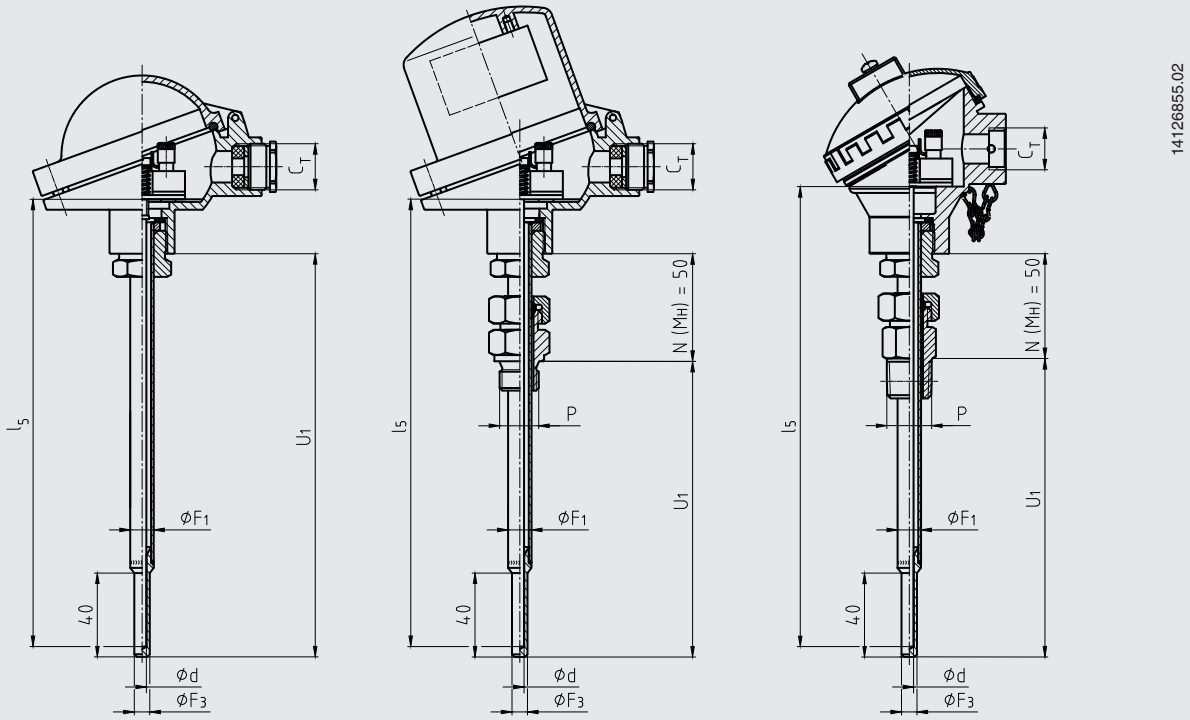

without thread (plain) parallel thread tapered thread

Legend:

U_1	Insertion length	Ø F_1	Protection tube diameter
l_5	Measuring insert length	Ø F_3	Diameter of protection tube tip
N (M_H)	Neck length	E	Mounting thread
K_E	1/2 NPT: 8.13 mm	Ø d	Measuring insert diameter
	3/4 NPT: 8.61 mm	P	Compression fitting mounting thread
C_T	Thread cable entry		

The pictures show examples of connection heads.

Protection tube versions

The protection tubes are made of drawn tube with a welded bottom and are screwed into the connection head with a rotatable threaded connection (male nut). By loosening this male nut, the connection head, and thus the cable outlet, can be adjusted to the desired position. The process connection is welded on to customer specification at the factory. This determines the insertion length. Insertion lengths to DIN standards are preferable.

The immersion depth into the process medium should be at least 10 times the protection tube outer diameter.

For replacement requirements use model TW35 protection tube.

Protection tube per DIN 43772	Protection tube diameter	Process connection	Suitable for measuring insert diameter	Connection to head	Material
Straight, form 2G, mounting thread	9 x 1 mm	G 1/4 B, mounting thread	6 mm	M24 x 1.5 (rotatable threaded connection, male nut)	1.4571
		G 1/2 B, mounting thread			
		G 3/4 B, mounting thread			
		G 1 B, mounting thread			
		M18 x 1.5, mounting thread			
		M20 x 1.5, mounting thread			
		M27 x 2, mounting thread			
		1/2 NPT, mounting thread			
		3/4 NPT, mounting thread			
	11 x 2 mm 12 x 2.5 mm	G 1/2 B, mounting thread	6 mm		
		G 3/4 B, mounting thread			
		G 1 B, mounting thread			
		M18 x 1.5, mounting thread			
		M20 x 1.5, mounting thread			
		M27 x 2, mounting thread			
		1/2 NPT, mounting thread			
		3/4 NPT, mounting thread			
	14 x 2.5 mm	G 1/2 B, mounting thread	8 mm (6 mm with sleeve)		
		G 3/4 B, mounting thread			
		G 1 B, mounting thread			
		M18 x 1.5, mounting thread			
		M20 x 1.5, mounting thread			
		M27 x 2, mounting thread			
		1/2 NPT, mounting thread			
		3/4 NPT, mounting thread			
Tapered, form 3G, mounting thread	12 x 2.5 mm, tapered to 9 mm	G 1/2 B, mounting thread	6 mm		
		G 3/4 B, mounting thread			
		G 1 B, mounting thread			
		M18 x 1.5, mounting thread			
		M20 x 1.5, mounting thread			
		M27 x 2, mounting thread			
		1/2 NPT, mounting thread			
		3/4 NPT, mounting thread			
Straight, plain, form 2, with/without compression fitting	9 x 1 mm 11 x 2 mm 12 x 2.5 mm	G 1/2 B compression fitting (metal ferrule)	6 mm		
		1/2 NPT compression fitting (metal ferrule)			
		Without threaded connection, plain			
Tapered, plain, form 3, with/without compression fitting	12 x 2.5 mm, tapered to 9 mm	G 1/2 B compression fitting (metal ferrule)	6 mm		
		1/2 NPT compression fitting (metal ferrule)			
		Without threaded connection, plain			

other versions on next page

Tapered protection tube, non-standard	Protection tube diameter	Process connection	Suitable for measuring insert diameter	Connection to head	Material
Tapered, weld-on solid tip, mounting thread	9 x 1 mm, tapered to 6 mm	G 1/4 B, mounting thread	3 mm	M24 x 1.5 (rotatable threaded connection, male nut)	1.4571
		G 1/2 B, mounting thread			
		G 3/4 B, mounting thread			
		G 1 B, mounting thread			
		M18 x 1.5, mounting thread			
		M20 x 1.5, mounting thread			
		M27 x 2, mounting thread			
		1/2 NPT, mounting thread			
		3/4 NPT, mounting thread			
	11 x 2 mm, tapered to 6 mm 12 x 2.5 mm, tapered to 6 mm	G 1/2 B, mounting thread			
		G 3/4 B, mounting thread			
		G 1 B, mounting thread			
		M14 x 1.5, mounting thread			
		M18 x 1.5, mounting thread			
		M20 x 1.5, mounting thread			
		1/2 NPT, mounting thread			
		3/4 NPT, mounting thread			
Tapered, weld-on solid tip, plain, with/without compression fitting	9 x 1 mm, tapered to 6 mm 11 x 2 mm, tapered to 6 mm 12 x 2.5 mm, tapered to 6 mm	G 1/2 B compression fitting (metal ferrule)			
		1/2 NPT compression fitting (metal ferrule)			
		Without threaded connection, plain			

Straight protection tube, non-standard	Protection tube diameter	Process connection	Suitable for measuring insert diameter	Connection to head	Material
Straight, mounting thread	6 x 1 mm 8 x 1 mm	G 1/4 B, mounting thread	3 mm	M24 x 1.5 (rotatable threaded connection, male nut)	1.4571 316L (8 x 1 mm)
		G 1/2 B, mounting thread			
		M18 x 1.5, mounting thread			
		M20 x 1.5, mounting thread			
		1/2 NPT, mounting thread			
	10 x 1 mm 10 x 1.5 mm	G 1/2 B, mounting thread	6 mm		316L
		G 3/4 B, mounting thread			
		G 1 B, mounting thread			
		M18 x 1.5, mounting thread			
		M20 x 1.5, mounting thread			
		M27 x 2, mounting thread			
		1/2 NPT, mounting thread			
		3/4 NPT, mounting thread			
	12 x 1 mm 12 x 1.5 mm	G 1/2 B, mounting thread	8 mm (6 mm with sleeve)		316L
		G 3/4 B, mounting thread			
		G 1 B, mounting thread			
		M18 x 1.5, mounting thread			
		M20 x 1.5, mounting thread			
		M27 x 2, mounting thread			
		1/2 NPT, mounting thread			
		3/4 NPT, mounting thread			

other versions on next page

Straight protection tube, non-standard	Protection tube diameter	Process connection	Suitable for measuring insert diameter	Connection to head	Material
Straight, plain, with/without compression fitting	6 x 1 mm 8 x 1 mm	G 1/2 B compression fitting (metal ferrule)	3 mm	M24 x 1.5 (rotatable threaded connection, male nut)	1.4571 316L (8 x 1 mm)
		1/2 NPT compression fitting (metal ferrule)			
		Without threaded connection, plain			
	9 x 1 mm 10 x 1 mm 10 x 1.5 mm 12 x 1 mm 12 x 1.5 mm	G 1/2 B compression fitting (metal ferrule)	6 mm		1.4571 (9 x 1 mm) 316L
		1/2 NPT compression fitting (metal ferrule)			
		Without threaded connection, plain			

Insertion lengths

Protection tube design	Standard insertion length	Min./max. insertion length
Straight, mounting thread, form 2G DIN 43772	160, 250, 400 mm	50 mm / 4,000 mm
Tapered, mounting thread, form 3G DIN 43772	160, 220, 280 mm	110 mm / 4,000 mm
Straight, plain, with/without compression fitting, form 2 DIN 43772	-	50 mm / 4,000 mm
Tapered, plain, with/without compression fitting, form 3 DIN 43772	-	110 mm / 4,000 mm
Tapered, weld-on solid tip, mounting thread, non-standard design	160, 250, 400 mm	75 mm / 4,000 mm
Tapered, plain, weld-on solid tip, with/without compression fitting, non-standard design	-	75 mm / 4,000 mm

Neck lengths

Protection tube design	Standard neck length	Min./max. neck length
Straight, mounting thread, form 2G DIN 43772	130 mm	30 mm / 1,000 mm
Tapered, mounting thread, form 3G DIN 43772	132 mm	30 mm / 1,000 mm
Straight, plain, with compression fitting, form 2 DIN 43772	50 mm	50 mm
Straight, plain, without compression fitting, form 2 DIN 43772	-	-
Tapered, plain, with compression fitting, form 3 DIN 43772	50 mm	50 mm
Tapered, plain, without compression fitting, form 3 DIN 43772	-	-
Tapered, weld-on solid tip, mounting thread, non-standard design	130 mm	30 mm / 1,000 mm
Tapered, weld-on solid tip, with compression fitting, non-standard design	50 mm	50 mm
Tapered, weld-on solid tip, without process connection, non-standard design	-	-

The neck tube is screwed into the connection head. The neck length depends on the intended use. Usually an isolation is bridged by the neck tube. Also, in many cases, the neck tube serves as a cooling extension between the connection head and the medium, in order to protect any possible built-in transmitter from high medium temperatures.

Other versions on request

Measuring insert

Within the TC10-C, the measuring insert of model TC10-A is fitted.

The replaceable measuring insert is made of a vibration-resistant, sheathed measuring cable (MI cable).

Measuring insert for thermocouple, model TC10-A

Only correct measuring insert length and correct measuring insert diameter ensure sufficient heat transfer from protection tube to the measuring insert.

The bore diameter of the protection tube should be a max. 1 mm larger than the measuring insert diameter. Gaps of more than 0.5 mm between protection tube and the measuring insert will have a negative effect on the heat transfer, and they will result in unfavourable response behaviour of the thermometer.

When fitting the measuring insert into a protection tube, it is very important to determine the correct insertion length (= protection tube length for bottom thicknesses of ≤ 5.5 mm). In order to ensure that the measuring insert is firmly pressed down onto the bottom of the protection tube, the insert must be spring-loaded (spring travel: max. 10 mm).

Material	
Sheath material	Ni alloy: alloy 600

Other sheath materials on request

Dimensions in mm

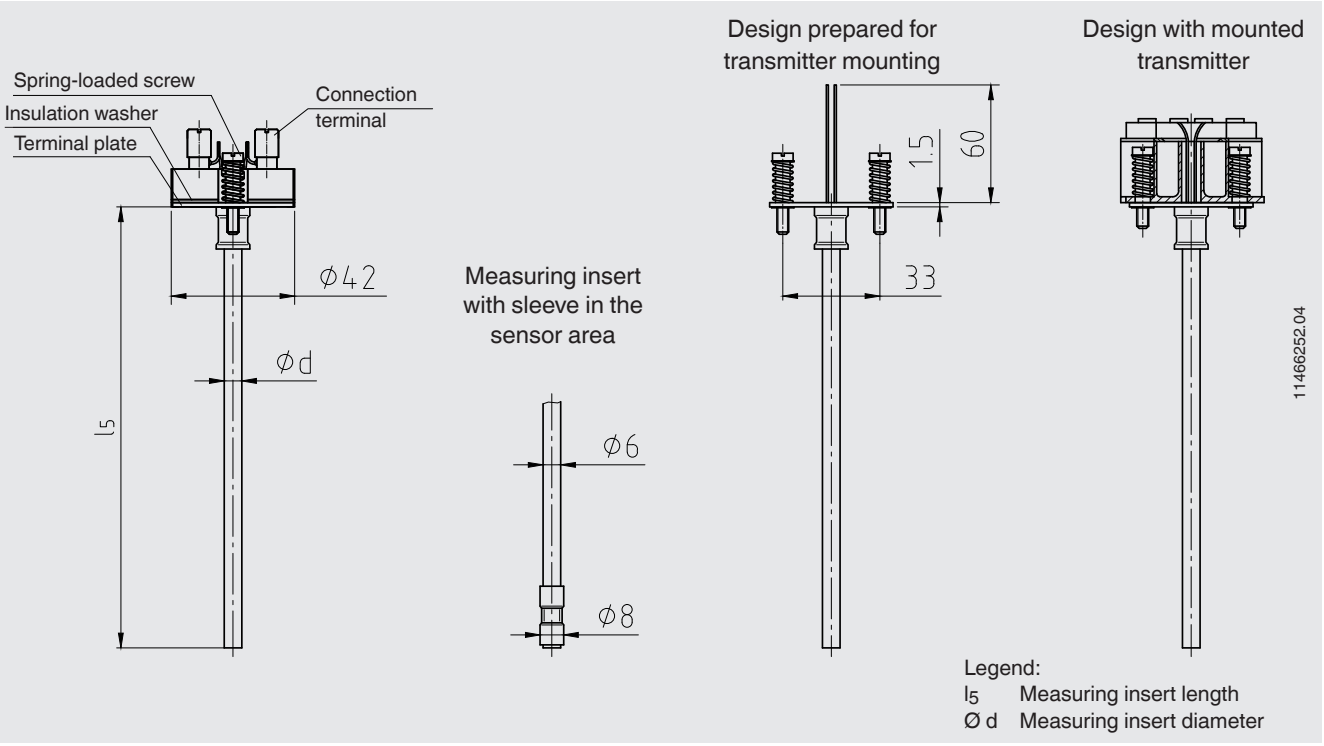

Measuring insert length l_5 in mm	Tolerance in mm
75 ... 825	+2 0
> 825	+3 0

Measuring insert diameter Ø d in mm		Index per DIN 43735	Tolerance in mm
3 [1]	Standard	30	3 ±0.05
6	Standard	60	6 $^{0}_{-0.1}$
8 (6 mm with sleeve)	Standard	-	8 $^{0}_{-0.1}$
8	Standard	80	8 $^{0}_{-0.1}$
1/8 in [3.17 mm] **1/4 in [6.35 mm]** **3/8 in [9.53 mm]**	Option, on request	-	-

Operating conditions

The replaceable measuring insert is made of a vibration-resistant, sheathed measuring cable (MI cable).
Standard vibration resistance: 50 g (sensor tip)

Max. process temperature, process pressure
Depending on:
- Load diagram DIN 43772
- Protection tube design
  - Dimensions
  - Material
- Process conditions
  - Flow rate
  - Medium density

Ambient and storage temperature
-40 ... +80 °C

Other ambient and storage temperatures on request

Thermowell calculation
With critical operating conditions, a thermowell calculation in accordance with Dittrich/Klotter is recommended as a WIKA engineering service.
Note: ASME PTC 19.3 TW-2016 is not applicable for the TC10-C.

For further information, see Technical information IN 00.15 “Strength calculation for thermowells”.

Certificates (option)

Certification type	Measurement accuracy	Material certificate [1]
2.2 test report	x	x
3.1 inspection certificate	x	x
DKD/DAkkS calibration certificate	x	-

1) Protection tubes have their own material certificates

The different certifications can be combined with each other.

For calibration, the measuring insert is removed from the thermometer. The minimum length (metal part of the probe) for carrying out a measurement accuracy test 3.1 or DKD/DAkkS is 100 mm.
Calibration of shorter lengths on request.