Bourdon tube pressure gauge, stainless steel
XSEL® process pressure gauge
Models 232.34 and 233.34, NS 4 ½" and 6"

for further approvals
see page 5

Applications

- For applications with highly dynamic pressure loads and vibrations
- For gaseous and liquid aggressive media that are not highly viscous or crystallising, also in aggressive environments
- Process industry: Plant construction, chemical industry, petrochemical industry, power plants, mining, on-/offshore and environmental technology
- Machine building and general plant construction

Special features

- Excellent load-cycle stability and shock resistance
- Safety version with solid baffle wall designed in compliance with the requirements and test conditions of ASME B 40.100
- With case filling (model 233.34) for applications with high dynamic pressure loads and vibrations
- Scale ranges from 0 … 10 to 0 … 30,000 psi [0 ... 0.6 to 0 ... 2,000 bar]

Bourdon tube pressure gauge, model 232.34, NS 4 ½"

Description

This high-quality Bourdon tube pressure gauge has been designed especially for the process industry.

The use of high-quality materials and the robust design are geared to applications in the chemical and process engineering industries.

Scale ranges of 0 … 10 to 0 … 30,000 psi [0 ... 0.6 to 0 ... 2,000 bar] ensure the measuring ranges required for a wide variety of applications.

WIKA manufactures and qualifies the pressure gauge in accordance with the standard ASME B40.100. As a safety function, this instrument has a solid baffle wall with blow-out back.

In the event of a failure, the operator is protected at the front side, as media or components can only be ejected via the back of the case.

The glass-fibre reinforced POCAN® case offers the necessary stability for reproducible measurements, even under aggressive ambient conditions.

With the model 233.34, the case filling in combination with a screwed-in restrictor enables use in applications with highly dynamic pressure loads and vibrations.

Data sheets showing similar products:
Stainless steel, safety version; model 232.30; see data sheet PM 02.04

Specifications

Basic information	
Standard	ASME B40.100
Special design feature	■ Without ■ For oxygen, cleanliness per ASME B40.1 level IV ■ Silicone-oil-free version ■ NACE version
Nominal size (NS)	■ 4 ½"[115 mm] ■ 6" [160 mm]
Connection location	■ Lower mount (radial) ■ Lower back mount
Window	■ Clear non-splintering plastic ■ Instrument glass ■ Laminated safety glass
	Sealing from NBR
Case	
Design	With solid baffle wall (Solidfront) and blow-out back
Internal pressure compensation [1]	■ Without ■ With diaphragm
Material	POCAN® (thermoplastic), black [2]
Ring	Threaded bezel, POCAN®, black [2]
Mounting	■ Surface mounting flange (integrated into case) ■ Adapter kit for panel mounting incl. front bezel from polished stainless steel [3]
Case filling (model 233.34)	■ Without ■ Glycerine ■ Glycerine-water mixture for scale ranges ≤ 0 ... 40 psi [≤ 0 ... 2.5 bar] ■ Silicone oil ■ Halocarbon oil
Movement	■ Stainless steel ■ Stainless steel, dampened with silicone oil
	Internal movement stop with vacuum and 1.1-fold full scale value

1) Filled instruments or instruments with radial lower mount connection are always equipped with a diaphragm for internal pressure compensation
2) Case and ring also available in red or yellow (only for NS 4 ½" [115], lower mount (radial))
3) Only available for NS 4 ½" [115]

Measuring element	
Type of measuring element	Bourdon tube, C-type or helical type
Material	Stainless steel 316L

Accuracy specifications	
Accuracy class	±0.5 % of measuring span (grade 2A) [1]
Temperature error	On deviation from the reference conditions at the measuring system: ≤ ±0.4 % per 18 °F [≤ ±0.4 % per 10 °C] of full scale value
Reference conditions	
Ambient temperature	+68 °F [+20 °C]

1) ±1 % of measuring span (grade 1A) for scale range ≥ 0 ... 20,000 psi [0 ... 1,600 bar]

Scale ranges, gauge pressure

psi	
0 ... 10	0 ... 1,000
0 ... 15	0 ... 1,500
0 ... 30	0 ... 2,000
0 ... 60	0 ... 3,000
0 ... 100	0 ... 5,000
0 ... 160	0 ... 10,000
0 ... 200	0 ... 15,000
0 ... 300	0 ... 20,000
0 ... 400	0 ... 30,000 [1)]
0 ... 600	

bar	
0 ... 0,6	0 ... 60
0 ... 1	0 ... 100
0 ... 1.6	0 ... 160
0 ... 2.5	0 ... 250
0 ... 4	0 ... 400
0 ... 6	0 ... 600
0 ... 10	0 ... 1,000
0 ... 16	0 ... 1,600
0 ... 25	0 ... 2,000 [1)]
0 ... 40	

kPa	
0 ... 60	0 ... 6,000
0 ... 100	0 ... 10,000
0 ... 160	0 ... 16,000
0 ... 250	0 ... 25,000
0 ... 400	0 ... 40,000
0 ... 600	0 ... 60,000
0 ... 1,000	0 ... 100,000
0 ... 1,600	0 ... 160,000
0 ... 2,500	0 ... 200,000 [1)]
0 ... 4,000	

MPa	
0 ... 0.06	0 ... 6
0 ... 0.1	0 ... 10
0 ... 0.16	0 ... 16
0 ... 0.25	0 ... 25
0 ... 0.4	0 ... 40
0 ... 0.6	0 ... 60
0 ... 1.0	0 ... 100
0 ... 1.6	0 ... 160
0 ... 2.5	0 ... 200 [1)]
0 ... 4	

1) Only available with a G ½ B or a high-pressure process connection (e.g. Autoclave Engineering)

Vacuum and +/- scale ranges

psi	
-30 inHg ... 0	-30 inHg ... +100
-30 inHg ... +15	-30 inHg ... +160
-30 inHg ... +30	-30 inHg ... +200
-30 inHg ... +60	-30 inHg ... +300

bar	
-1 ... 0	-1 ... +5
-1 ... +0.6	-1 ... +9
-1 ... +1.5	-1 ... +15
-1 ... +3	-1 ... +24

kPa	
-100 ... 0	-100 ... +500
-100 ... +60	-100 ... +900
-100 ... +150	-100 ... +1,500
-100 ... +300	-100 ... +2,400

MPa	
-0.1 ... 0	-0.1 ... +0.5
-0.1 ... +0.06	-0.1 ... +0.9
-0.1 ... +0.15	-0.1 ... +1.5
-0.1 ... +0.3	-0.1 ... +2.4

Further details on: Scale ranges	
Unit	■ psi ■ bar ■ kg/cm^2 ■ kPa ■ MPa

Further details on: Scale ranges	
Increased overload safety	■ Without ■ 2-fold ■ 3-fold ■ 4-fold ■ 5-fold
	The possibility of selection depends on the scale range
Vacuum resistance	■ Without ■ Vacuum-resistant to -1 bar
Dial	
Scale colour	Black
Material	Aluminium
Customer-specific version	■ Without ■ Reflecting scales with InSight™ printing (e.g. white reflecting scale, fluorescent or glow-in-the-dark dial)
	Other scales, e.g. with red mark, circular arcs or circular sectors, on request
Pointer	
Instrument pointer	Adjustable pointer, aluminium, black
Mark pointer/drag pointer	■ Without ■ Red drag pointer on window, resetting with fixed adjustment key ■ Red drag pointer on window, resetting with removable adjustment key
Pointer stop pin	At 6 o'clock

Other scale ranges and units on request

Process connection	
Standard	■ ANSI/ASME B1.20.1 ■ EN 837-1
Size	
ANSI/ASME B1.20.1	■ ¼ NPT, male thread ■ ½ NPT, male thread
EN 837-1	■ G ¼ B, male thread ■ G ½ B, male thread
Restrictor	■ Ø 0.6 mm [0.024"], stainless steel ■ Ø 0.3 mm [0.012"], stainless steel
Material (wetted)	
Process connection	Stainless steel 316L
Bourdon tube	Stainless steel 316L

Other process connections on request

Operating conditions		
Medium temperature	-4 ... +212 °F [-20 ... +100 °C]	
Ambient temperature		
With glycerine filling	-4 ... +140 °F [-20 ... +60 °C]	
Unfilled instruments or with silicone oil filling	-40 ... +140 °F [-40 ... +60 °C]	
Pressure limitation	Steady	Full scale value
	Fluctuating	0.9 x full scale value
	Short time	1.5 x full scale value [1)]
Ingress protection [2)]	■ IP54 per EN/IEC 60529 ■ IP65 per EN/IEC 60529	

1) 1,0 x full scale value for scale ranges > 10,000 psi [690 bar]
2) Filled instruments or instruments with radial lower mount connection always fulfil IP65 ingress protection

Approvals

Logo	Description	Region
CE	**EU declaration of conformity** Pressure equipment directive PS > 200 bar, module A, pressure accessory	European Union
-	**CRN** Safety (e.g. electr. safety, overpressure, ...) For scale ranges ≤ 1,000 bar	Canada

Optional approvals

Logo	Description	Region
	PAC Russia Metrology, measurement technology	Russia
	PAC Kazakhstan Metrology, measurement technology	Kazakhstan
-	**MChS** Permission for commissioning	Kazakhstan

Certificates (option)

Certificates	
Certificates	■ 2.2 test report per EN 10204 (e.g. state-of-the-art manufacturing, indication accuracy) ■ 3.1 inspection certificate per EN 10204 (e.g. material proof for wetted metal parts, indication accuracy) ■ A2LA calibration certificate, traceable and accredited in accordance with ISO/IEC 17025 ■ Calibration certificate by a national accreditation body, traceable and accredited in accordance with ISO/IEC 17025 on request
Recommended recalibration interval	1 year (dependent on conditions of use)

→ Approvals and certificates, see website

Dimensions in inch [mm]

Lower mount (radial)

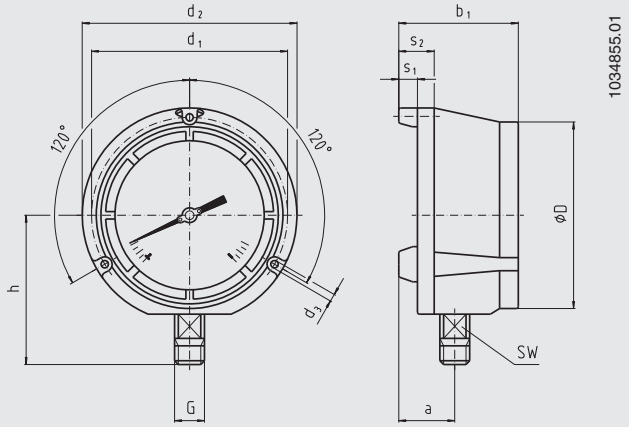

Lower back mount

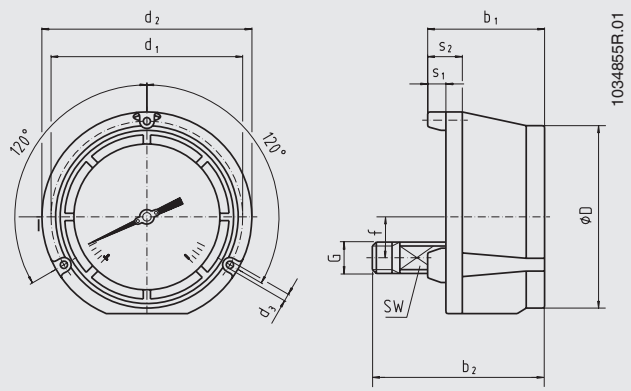

Process connection with thread per ANSI/ASME B1.20.1

NS	G	Dimensions in inch [mm]											
		a	b_1	b_2	D	d_1	d_2	d_3	f	h	s_1	s_2	SW
4 ½" [115]	¼ NPT	1.57 [40]	3.31 [84]	4.49 [114]	5 [128]	5.37 [136.5]	5.83 [148]	0.248 [6.3]	1.12 [28.5]	3.91 [99]	0.49 [12.5]	0.99 [25]	0.87 [22]
	½ NPT	1.57 [40]	3.31 [84]	4.74 [120]	5 [128]	5.37 [136.5]	5.83 [148]	0.248 [6.3]	1.12 [28.5]	4.06 [103]	0.49 [12.5]	0.99 [25]	0.87 [22]
6" [160]	¼ NPT	1.58 [40.2]	3.46 [88]	4.62 [117.4]	6.46 [164]	7 [177.8]	7.5 [190]	0.28 [7.1]	1.12 [28.5]	4.58 [116.5]	0.5 [12.7]	1 [25.4]	0.87 [22]
	½ NPT	1.58 [40.2]	3.46 [88]	4.86 [123.4]	6.46 [164]	7 [177.8]	7.5 [190]	0.28 [7.1]	1.12 [28.5]	4.82 [122.5]	0.5 [12.7]	1 [25.4]	0.87 [22]

Process connection with thread per EN 837-1

NS	G	Dimensions in inch [mm]											
		a	b_1	b_2	D	d_1	d_2	d_3	f	h	s_1	s_2	SW
4 ½" [115]	G ¼ B	1.57 [40]	3.31 [84]	4.49 [114]	5 [128]	5.37 [136.5]	5.83 [148]	0.248 [6.3]	1.12 [28.5]	3.82 [97]	0.49 [12.5]	0.99 [25]	0.87 [22]
	G ½ B	1.57 [40]	3.31 [84]	4.76 [121]	5 [128]	5.37 [136.5]	5.83 [148]	0.248 [6.3]	1.12 [28.5]	4.09 [104]	0.49 [12.5]	0.99 [25]	0.87 [22]
6" [160]	G ¼ B	1.58 [40.2]	3.46 [88]	4.62 [117.4]	6.46 [164]	7 [177.8]	7.5 [190]	0.28 [7.1]	1.12 [28.5]	4.58 [116.5]	0.5 [12.7]	1 [25.4]	0.87 [22]
	G ½ B	1.58 [40.2]	3.46 [88]	4.89 [124.4]	6.46 [164]	7 [177.8]	7.5 [190]	0.28 [7.1]	1.12 [28.5]	4.86 [123.5]	0.5 [12.7]	1 [25.4]	0.87 [22]

NS	Weight	
	Model 232.34	Model 233.34
4 ½" [115]	approx. 2 lbs [0.9 kg]	approx. 3 lbs [1.4 kg]
6" [160]	approx. 3 lbs [1.4 kg]	approx. 4 lbs [1.8 kg]

Accessories

Adapter kit for panel mounting
Only for NS 4 ½" [115]

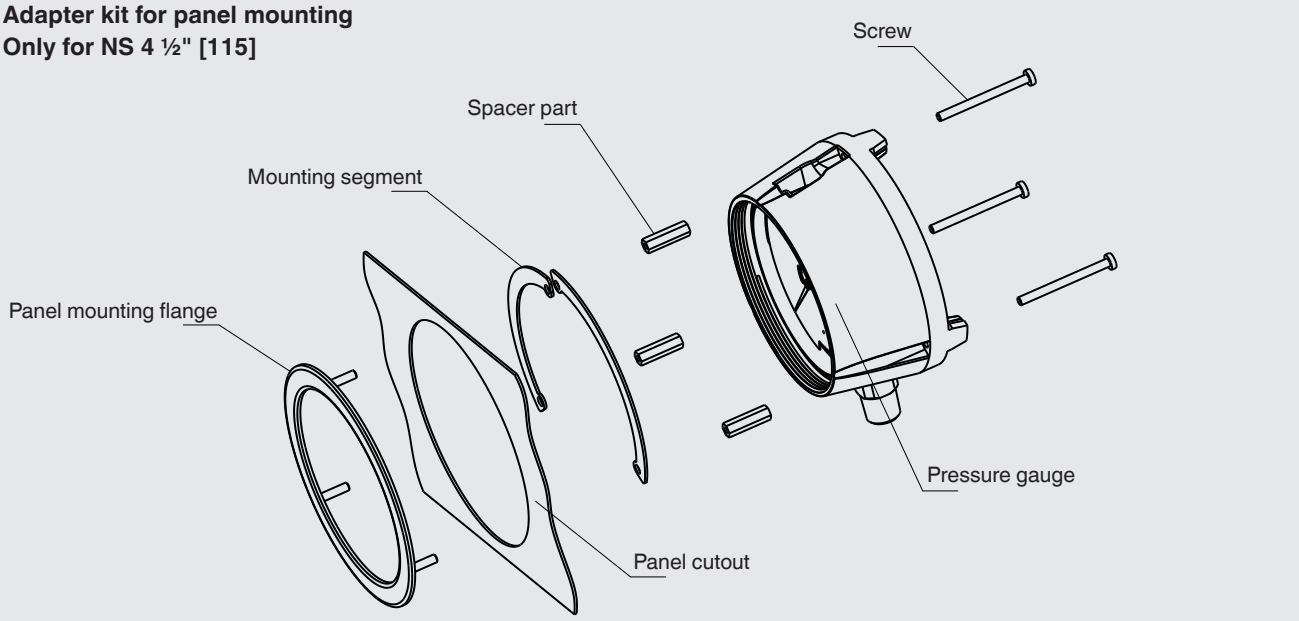

Dimensions in inch [mm]		Order number
Recommended panel cutout	Wall thickness of control panel	
∅ 5.69 [144.5]	0.063 ... 0.31 [1.5 ... 7.9]	0738581

Accessories and spare parts

Model		Description
	**910.17**	Sealings → see data sheet AC 09.08
	**910.15**	Syphons → see data sheet AC 09.06
	**910.13**	Overpressure protector → see data sheet AC 09.04
	**IV10, IV11**	Needle valve and multiport valve → see data sheet AC 09.22
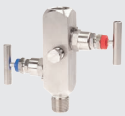	**IV20, IV21**	Block-and-bleed valve → see data sheet AC 09.19
	**IVM**	Monoflange, process and instrument version → see data sheet AC 09.17
	**BV**	Ball valve, process and instrument version → see data sheet AC 09.28
	**IBF2, IBF3**	Monoblock with flange connection → see data sheet AC 09.25

Ordering information

Model / Nominal size / Scale range / Process connection / Connection location / Options

Your WIKA Sales Partner

ICS Schneider Messtechnik GmbH
Briesestrasse 59
D-16562 Hohen Neuendorf / OT Bergfelde
Tel.: +49 3303 5040-66
Fax: +49 3303 5040-68
E-Mail: info@ics-schneider.de

WIKA Alexander Wiegand SE & Co. KG
Alexander-Wiegand-Straße 30
63911 Klingenberg/Germany
Tel. +49 9372 132-0
Fax +49 9372 132-406
info@wika.de
www.wika.de