Bourdon tube pressure gauge, copper alloy
Stainless steel case, case filling
Model 213.53, NS 50 [2"], 63 [2 ½"] and 100 [4"]

for further approvals, see page 7

Applications

- For measuring locations with high dynamic pressure loads and vibrations
- For gaseous and liquid media that are not highly viscous or crystallising and will not attack copper alloy parts
- Hydraulics
- Compressors, shipbuilding

Special features

- Very good vibration and shock resistance
- Especially robust design
- Type approval for the shipbuilding industry
- Scale ranges to 0 ... 1,000 bar or 0 ... 15,000 psi

Bourdon tube pressure gauge, model 213.53.100, lower mount

Description

The liquid-filled model 213.53 mechanical Bourdon tube pressure gauge is constructed with a case from stainless steel and wetted parts from copper alloy.

WIKA manufactures and qualifies the pressure gauge in accordance with the standards EN 837-1 and ASME B40.100. As a safety function, this instrument has a blow-out device. In the event of a failure, overpressure can escape there.

Due to the case filling, the pressure element and movement are efficiently damped. Therefore, these instruments are particularly suited to measuring locations with high dynamic loads, such as fast load cycles or vibrations.

The cases of the model 213.53 are available in nominal sizes of 50 [2"], 63 [2 ½"] and 100 [4"] and fulfil IP65 ingress protection. With an accuracy of up to class 1.0, this pressure gauge is suitable for a wide range of applications in industry.

For mounting in control panels, the pressure gauges with a back mount process connection can be fitted with a mounting flange or with a triangular profile ring and mounting bracket.

Data sheets showing similar products:
Stainless steel case, liquid filling, NS 40, 80 and 100; model 113.53; see data sheet PM 01.08

Specifications

Basic information		
Standard	■ EN 837-1 ■ ASME B40.100	
	For information on the “Selection, installation, handling and operation of pressure gauges”, see technical information IN 00.05.	
Further version	Special design, model 213.57	
Nominal size (NS)	■ Ø 50 mm [2"] ■ Ø 63 mm [2 ½"] ■ Ø 100 mm [4"]	
Connection location	■ Lower mount (radial) ■ Centre back mount (only for NS 50 [2"] and NS 63 [2 ½"]) ■ Lower back mount (only for NS 100 [4"])	
Window	■ Plastic, crystal-clear ■ Laminated safety glass	
Case		
Design	NS 50 [2"], 63 [2 ½"]	Safety level “S2” per EN 837-1: With blow-out device
	NS 100 [4"]	Safety level “S1” per EN 837-1: With blow-out device
	Position of blow-out device: NS 50 [2"]: Case back, at 12 o'clock NS 63 [2 ½"], 100 [4"]: Case circumference, at 12 o'clock Filling plug can be vented and resealed for internal pressure compensation Sealing towards process connection with O-ring	
Material	Stainless steel, natural finish	
Ring	Crimp ring, stainless steel	
Mounting	■ Without ■ Panel mounting flange, stainless steel [1)] ■ Panel mounting flange, polished stainless steel [2)] ■ Triangular profile ring with mounting bracket, polished stainless steel [3)] ■ Surface mounting flange, stainless steel [4)]	
Case filling	■ Glycerine ■ Glycerine-water mixture for scale range ≤ 0 ... 2.5 bar [≤ 0 ... 40 psi] ■ Silicone oil	
Movement	Copper alloy	

1) Only for back mount
2) Only for NS 63 [2 ½"] and NS 100 [4"], back mount
3) Only for NS 63 [2 ½"]
4) Only for NS 63 [2 ½"] and NS 100 [4"]

Measuring element		
Type of measuring element	Bourdon tube, C-type or helical type	
Material		
NS 50 [2"]	≤ 600 bar	Copper alloy
	> 600 bar	Stainless steel 316L
NS 63 [2 ½"], NS 100 [4"]	≤ 400 bar	Copper alloy
	> 400 bar	Stainless steel 316L
Leak tightness	Leakage rate: $< 5 \cdot 10^{-3}$ mbar l/s	

Accuracy specifications		
Accuracy class		
NS 50 [2"], 63 [2 ½"]	■ EN 837-1	Class 1.6
	■ ASME B40.100	±2 % | ±1 % | ±2 % of measuring span (grade A)
NS 100 [4"]	■ EN 837-1	Class 1.0
	■ ASME B40.100	±1 % of measuring span (grade 1A)
Temperature error	On deviation from the reference conditions at the measuring system: ≤ ±0.4 % per 10 °C [≤ ±0.4 % per 18 °F] of full scale value	
Reference conditions		
Ambient temperature	+20 °C [68 °F]	

Scale ranges

bar	
0 ... 0.6	0 ... 30
0 ... 1	0 ... 40
0 ... 1.6	0 ... 60
0 ... 2	0 ... 70
0 ... 2.5	0 ... 100
0 ... 4	0 ... 140
0 ... 6	0 ... 160
0 ... 7	0 ... 200
0 ... 10	0 ... 250
0 ... 12	0 ... 315
0 ... 14	0 ... 400
0 ... 16	0 ... 600
0 ... 20	0 ... 700
0 ... 25	0 ... 1,000

kg/cm²	
0 ... 0.6	0 ... 40
0 ... 1	0 ... 60
0 ... 1.6	0 ... 70
0 ... 2	0 ... 100
0 ... 2.5	0 ... 140
0 ... 4	0 ... 160
0 ... 6	0 ... 200
0 ... 7	0 ... 250
0 ... 10	0 ... 315
0 ... 14	0 ... 400
0 ... 16	0 ... 600
0 ... 20	0 ... 700
0 ... 25	0 ... 1,000
0 ... 30	

kPa	
0 ... 60	0 ... 4,000
0 ... 70	0 ... 6,000
0 ... 100	0 ... 7,000
0 ... 160	0 ... 8,000
0 ... 200	0 ... 10,000
0 ... 250	0 ... 14,000
0 ... 400	0 ... 16,000
0 ... 600	0 ... 20,000
0 ... 700	0 ... 25,000
0 ... 800	0 ... 31,500
0 ... 1,000	0 ... 40,000
0 ... 1,400	0 ... 60,000
0 ... 1,600	0 ... 70,000
0 ... 2,500	0 ... 100,000
0 ... 3,000	

MPa	
0 ... 0.06	0 ... 4
0 ... 0.1	0 ... 6
0 ... 0.16	0 ... 7
0 ... 0.2	0 ... 10
0 ... 0.25	0 ... 14
0 ... 0.4	0 ... 16
0 ... 0.6	0 ... 20
0 ... 0.7	0 ... 25
0 ... 1	0 ... 31.5
0 ... 1.4	0 ... 40
0 ... 1.6	0 ... 60
0 ... 2	0 ... 70
0 ... 2.5	0 ... 100
0 ... 3	

psi	
0 ... 10	0 ... 600
0 ... 15	0 ... 800
0 ... 30	0 ... 1,000
0 ... 60	0 ... 1,500
0 ... 100	0 ... 2,000
0 ... 150	0 ... 3,000
0 ... 160	0 ... 4,000
0 ... 200	0 ... 5,000
0 ... 300	0 ... 6,000
0 ... 400	0 ... 7,500

Vacuum and +/- scale ranges

bar	
-0.6 ... 0	-1 ... +9
-1 ... 0	-1 ... +10
-1 ... +0.6	-1 ... +15
-1 ... +1	-1 ... +24
-1 ... +1.5	-1 ... +25
-1 ... +2	-1 ... +30
-1 ... +3	-1 ... +32
-1 ... +4	-1 ... +40
-1 ... +7	

kg/cm²	
-0.6 ... 0	-1 ... +5
-1 ... 0	-1 ... +7
-1 ... +0.6	-1 ... +9
-1 ... +1	-1 ... +10
-1 ... +1.5	-1 ... +15
-1 ... +2	-1 ... +24
-1 ... +3	-1 ... +30
-1 ... +4	

kPa	
-60 ... 0	-100 ... +500
-100 ... 0	-100 ... +700
-100 ... +60	-100 ... +900
-100 ... +100	-100 ... +1,000
-100 ... +150	-100 ... +1,500
-100 ... +200	-100 ... +2,400
-100 ... +300	-100 ... +3,000
-100 ... +400	

MPa	
-0.06 ... 0	-0.1 ... +0.5
-0.1 ... 0	-0.1 ... +0.9
-0.1 ... +0.06	-0.1 ... +1.5
-0.1 ... +0.15	-0.1 ... +2.4
-0.1 ... +0.3	

psi	
-15 inHg ... 0	-30 inHg ... +100
-30 inHg ... 0	-30 inHg ... +160
-30 inHg ... +15	-30 inHg ... +200
-30 inHg ... +30	-30 inHg ... +300
-30 inHg ... +60	

Further details on: Scale ranges	
Special scale ranges	Other scale ranges on request
Unit	■ bar ■ psi ■ kg/cm² ■ kPa ■ MPa
Increased overload safety	■ Without ■ 2 times
	The possibility of selection depends on the scale range
Dial	
Scale colour	Black
Material	Aluminium
Special scale	■ Without ■ With temperature scale for refrigerant, e.g. for NH_3: R 717
	Other scales or customer-specific dials, e.g. with red mark, circular arcs or circular sectors, on request

Further details on: Scale ranges	
Pointer	
Instrument pointer	Aluminium, black
Mark pointer/drag pointer	■ Without ■ Red mark pointer on dial, fixed ■ Red mark pointer on window, adjustable ■ Mark pointer on bayonet ring, adjustable ■ Red drag pointer on window, adjustable
Pointer stop pin	■ Without ■ At zero point (only for NS 50 [2"] and NS 63 [2 ½"]) ■ At 6 o‘clock (only for NS 100 [4"])

Process connection	
Standard	■ EN 837-1 ■ ISO 7 ■ ANSI/B1.20.1
Size	
EN 837-1	■ G ⅛ B, male thread ■ G ¼ B, male thread ■ G ½ B, male thread ■ M12 x 1.5, male thread ■ M20 x 1.5, male thread
ISO 7	■ R ¼, male thread ■ R ½, male thread
ANSI/B1.20.1	■ ¼ NPT, male thread ■ ½ NPT, male thread
Restrictor	■ Without ■ Ø 0.5 mm [0.02"], copper alloy ■ Ø 0.3 mm [0.012"], copper alloy
Material (wetted)	
Process connection	Copper alloy
Bourdon tube	→ See table “Measuring element”, page 2

Other process connections on request

Operating conditions		
Medium temperature		
Instruments with glycerine filling	-20 ... +100 °C [-4 ... +212 °F]	
Instruments with silicone oil filling	-40 ... +100 °C [-40 ... +212 °F]	
Ambient temperature		
Instruments with glycerine filling	-20 ... +60 °C [-4 ... +140 °F]	
Instruments with silicone oil filling	-40 ... +60 °C [-40 ... +140 °F]	
Pressure limitation		
NS 50 [2"], 63 [2 ½"]	Steady	3/4 x full scale value
	Fluctuating	2/3 x full scale value
	Short time	Full scale value
NS 100 [4"]	Steady	Full scale value
	Fluctuating	0.9 x full scale value
	Short time	1.3 x full scale value
Ingress protection per IEC/EN 60529	■ IP65 ■ IP66 (only selectable for scale ranges ≥ 0 ... 20 bar [≥ 0 ... 400 psi])	

Approvals

Logo	Description	Region
CE	**EU declaration of conformity** Pressure equipment directive PS > 200 bar, module A, pressure accessory	European Union
UK CA	**UKCA** Pressure equipment (safety) regulations	United Kingdom
-	**CRN** Safety (e.g. electr. safety, overpressure, ...) For scale ranges ≤ 1,000 bar	Canada

Optional approvals

Logo	Description	Region
	PAC Kazakhstan Metrology, measurement technology	Kazakhstan
-	**MChS** Permission for commissioning	Kazakhstan
-	**PAC Ukraine** Metrology, measurement technology	Ukraine
	PAC Uzbekistan Metrology, measurement technology	Uzbekistan
-	**PAC China** Metrology, measurement technology	China
	DNV GL Ships, shipbuilding (e.g. offshore)	International

Manufacturer's information and certificates

Logo	Description
-	Pressure equipment directive (PED) for maximum allowable pressure PS ≤ 200 bar
-	Suitability of wetted materials for drinking water in accordance with the European 4MS initiative

Certificates (option)

Certificates	
Certificates	■ 2.2 test report per EN 10204 (e.g. state-of-the-art manufacturing, indication accuracy) ■ 3.1 inspection certificate for indication accuracy per EN 10204 ■ PCA calibration certificate, traceable and accredited in accordance with ISO/IEC 17025 ■ Calibration certificate by a national accreditation body, traceable and accredited in accordance with ISO/IEC 17025 on request
Recommended calibration interval	1 year (dependent on conditions of use)

→ For approvals and certificates, see website

Dimensions in mm [in]

NS 50 [2"] and NS 63 [2 ½"], lower mount (radial)

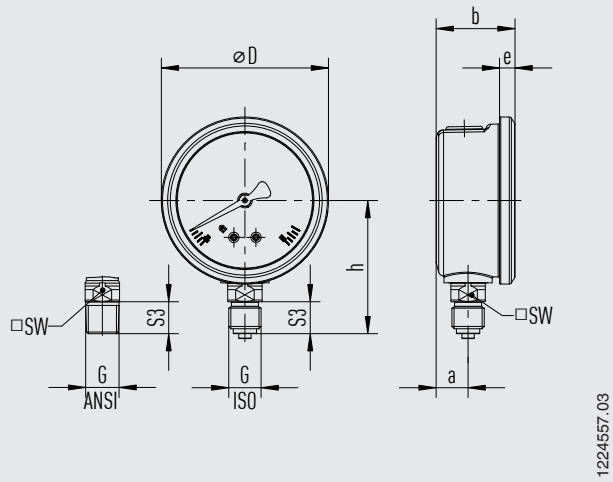

NS	Weight
NS 50 [2"]	0.15 kg [0.33 lb]
NS 63 [2 ½"]	0.21 kg [0.46 lb]

Process connection with thread per EN 837-1

NS	G	Dimensions in mm [in]						
		h ±1 [0.04]	S3	a	b ±0.5 [0.02]	e	D	SW
50 [2"]	G ⅛ B	45 [1.77]	10 [0.39]	12 [0.47]	30 [1.18]	5.5 [0.22]	55 [2.17]	14 [0.55]
	G ¼ B	48 [1.89]	13 [0.51]	12 [0.47]	30 [1.18]	5.5 [0.22]	55 [2.17]	14 [0.55]
	M12 x 1.5	48 [1.89]	13 [0.51]	12 [0.47]	30 [1.18]	5.5 [0.22]	55 [2.17]	14 [0.55]
63 [2 ½"]	G ⅛ B	51 [2.01]	10 [0.39]	13 [0.51]	32 [1.26]	6.5 [0.26]	68 [2.68]	14 [0.55]
	G ¼ B	54 [2.13]	13 [0.51]	13 [0.51]	32 [1.26]	6.5 [0.26]	68 [2.68]	14 [0.55]
	M12 x 1.5	54 [2.13]	13 [0.51]	13 [0.51]	32 [1.26]	6.5 [0.26]	68 [2.68]	14 [0.55]

Process connection with thread per ISO 7

NS	G	Dimensions in mm [in]						
		h ±1 [0.04]	S3	a	b ±0.5 [0.02]	e	D	SW
50 [2"]	R ⅛	45 [1.77]	10 [0.39]	12 [0.47]	30 [1.18]	5.5 [0.22]	55 [2.17]	14 [0.55]
	R ¼	51 [2.01]	13 [0.51]	12 [0.47]	30 [1.18]	5.5 [0.22]	55 [2.17]	14 [0.55]
63 [2 ½"]	R ⅛	51 [2.01]	10 [0.39]	13 [0.51]	32 [1.26]	6.5 [0.26]	68 [2.68]	14 [0.55]
	R ¼	54 [2.13]	13 [0.51]	13 [0.51]	32 [1.26]	6.5 [0.26]	68 [2.68]	14 [0.55]

Process connection with thread per ANSI/B1.20.1

NS	G	Dimensions in mm [in]						
		h ±1 [0.04]	S3	a	b ±0.5 [0.02]	e	D	SW
50 [2"]	⅛ NPT	45 [1.77]	10 [0.39]	12 [0.47]	30 [1.18]	5.5 [0.22]	55 [2.17]	14 [0.55]
	¼ NPT	51 [2.01]	13 [0.51]	12 [0.47]	30 [1.18]	5.5 [0.22]	55 [2.17]	14 [0.55]
63 [2 ½"]	⅛ NPT	51 [2.01]	10 [0.39]	13 [0.51]	32 [1.26]	6.5 [0.26]	68 [2.68]	14 [0.55]
	¼ NPT	54 [2.13]	13 [0.51]	13 [0.51]	32 [1.26]	6.5 [0.26]	68 [2.68]	14 [0.55]

NS 100 [4"], lower mount (radial)

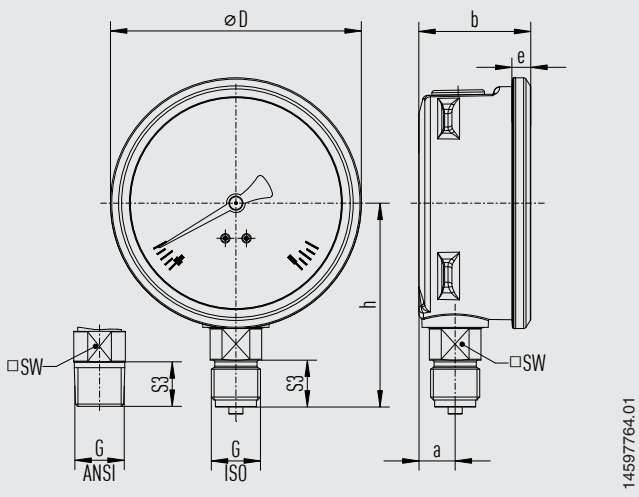

NS	Weight
NS 100 [4"]	0.8 kg [1.76 lb]

Process connection with thread per EN 837-1

NS	G	Dimensions in mm [in]					
		h ±1 [0.04]	S3	a	b ±0.5 [0.02]	D	SW
NS 100 [4"]	G ¼ B	80 [3.15]	13 [0.51]	15.4 [0.61]	48 [1.89]	107 [4.21]	22 [0.87]
	G ½ B	87 [3.43]	20 [0.79]	15.4 [0.61]	48 [1.89]	107 [4.21]	22 [0.87]

Process connection with thread per ISO 7

NS	G	Dimensions in mm [in]					
		h ±1 [0.04]	S3	a	b ±0.5 [0.02]	D	SW
NS 100 [4"]	R ¼	80 [3.15]	13 [0.51]	15.4 [0.61]	48 [1.89]	107 [4.21]	22 [0.87]
	R ½	86 [3.39]	19 [0.75]	15.4 [0.61]	48 [1.89]	107 [4.21]	22 [0.87]

Process connection with thread per ANSI/B1.20.1

NS	G	Dimensions in mm [in]					
		h ±1 [0.04]	S3	a	b ±0.5 [0.02]	D	SW
NS 100 [4"]	¼ NPT	80 [3.15]	13 [0.51]	15.4 [0.61]	48 [1.89]	107 [4.21]	22 [0.87]
	½ NPT	86 [3.39]	19 [0.75]	15.4 [0.61]	48 [1.89]	107 [4.21]	22 [0.87]

NS 50 [2½"] and NS 63 [2½"], centre back mount

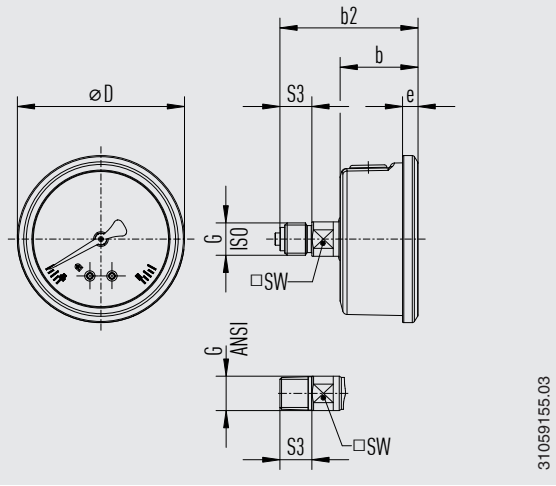

NS	Weight
NS 50 [2½"]	0.15 kg [0.33 lb]
NS 63 [2½"]	0.21 kg [0.46 lb]

Process connection with thread per EN 837-1

NS	G	Dimensions in mm [in]					
		b2 ±0.5 [0.02]	b ±0.5 [0.02]	S3	e	D	SW
50 [2"]	G ⅛ B	52 [2.17]	30 [1.18]	10 [0.39]	5.5 [0.22]	55 [2.17]	14 [0.55]
	G ¼ B	55 [2.17]	30 [1.18]	13 [0.51]	5.5 [0.22]	55 [2.17]	14 [0.55]
	M12 x 1.5	55 [2.17]	30 [1.18]	13 [0.51]	5.5 [0.22]	55 [2.17]	14 [0.55]
63 [2 ½"]	G ⅛ B	54 [2.13]	32 [1.26]	10 [0.39]	6.5 [0.26]	68 [2.68]	14 [0.55]
	G ¼ B	57 [2.24]	32 [1.26]	13 [0.51]	6.5 [0.26]	68 [2.68]	14 [0.55]
	M12 x 1.5	57 [2.24]	32 [1.26]	13 [0.51]	6.5 [0.26]	68 [2.68]	14 [0.55]

Process connection with thread per ISO 7

NS	G	Dimensions in mm [in]					
		b2 ±0.5 [0.02]	b ±0.5 [0.02]	S3	e	D	SW
50 [2"]	R ⅛	52 [2.17]	30 [1.18]	10 [0.39]	5.5 [0.22]	55 [2.17]	14 [0.55]
	R ¼	55 [2.17]	30 [1.18]	13 [0.51]	5.5 [0.22]	55 [2.17]	14 [0.55]
63 [2 ½"]	R ⅛	54 [2.13]	32 [1.26]	10 [0.39]	6.5 [0.26]	68 [2.68]	14 [0.55]
	R ¼	57 [2.24]	32 [1.26]	13 [0.51]	6.5 [0.26]	68 [2.68]	14 [0.55]

Process connection with thread per ANSI/B1.20.1

NS	G	Dimensions in mm [in]					
		b2 ±0.5 [0.02]	b ±0.5 [0.02]	S3	e	D	SW
50 [2"]	⅛ NPT	52 [2.17]	30 [1.18]	10 [0.39]	5.5 [0.22]	55 [2.17]	14 [0.55]
	¼ NPT	55 [2.17]	30 [1.18]	13 [0.51]	5.5 [0.22]	55 [2.17]	14 [0.55]
63 [2 ½"]	⅛ NPT	54 [2.13]	32 [1.26]	10 [0.39]	6.5 [0.26]	68 [2.68]	14 [0.55]
	¼ NPT	57 [2.24]	32 [1.26]	13 [0.51]	6.5 [0.26]	68 [2.68]	14 [0.55]

NS 100 [4"], lower back mount

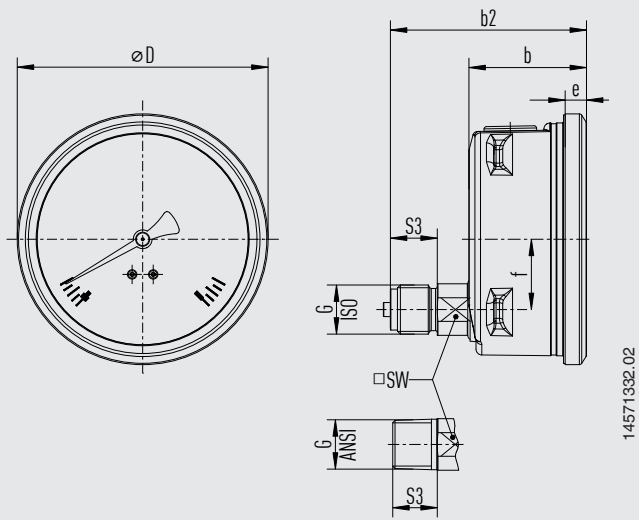

NS	Weight
NS 100 [4"]	0.8 kg [1.76 lb]

Process connection with thread per EN 837-1

NS	G	Dimensions in mm [in]						
		b2 ±0.5 [0.02]	b ±0.5 [0.02]	S3	e	f	D	SW
NS 100 [4"]	G ¼ B	76.5 [3.01]	50 [1.97]	13 [0.51]	9 [0.36]	30 [1.18]	107 [4.21]	22 [0.87]
	G ½ B	83.5 [3.29]	50 [1.97]	20 [0.97]	9 [0.36]	30 [1.18]	107 [4.21]	22 [0.87]

Process connection with thread per ISO 7

NS	G	Dimensions in mm [in]						
		b2 ±0.5 [0.02]	b ±0.5 [0.02]	S3	e	f	D	SW
NS 100 [4"]	R ¼	76.5 [3.01]	50 [1.97]	13 [0.51]	9 [0.36]	30 [1.18]	107 [4.21]	22 [0.87]
	R ½	82.5 [3.25]	50 [1.97]	20 [0.97]	9 [0.36]	30 [1.18]	107 [4.21]	22 [0.87]

Process connection with thread per ANSI/B1.20.1

NS	G	Dimensions in mm [in]						
		b2 ±0.5 [0.02]	b ±0.5 [0.02]	S3	e	f	D	SW
NS 100 [4"]	¼ NPT	76.5 [3.01]	50 [1.97]	13 [0.51]	9 [0.36]	30 [1.18]	107 [4.21]	22 [0.87]
	½ NPT	82.5 [3.25]	50 [1.97]	20 [0.97]	9 [0.36]	30 [1.18]	107 [4.21]	22 [0.87]

Ordering information

Model / Nominal size / Scale range / Process connection / Connection location / Options

Your WIKA Sales Partner

ICS Schneider Messtechnik GmbH
Briesestrasse 59
D-16562 Hohen Neuendorf / OT Bergfelde
Tel.: +49 3303 5040-66
Fax: +49 3303 5040-68
E-Mail: info@ics-schneider.de

WIKA Alexander Wiegand SE & Co. KG
Alexander-Wiegand-Straße 30
63911 Klingenberg/Germany
Tel. +49 9372 132-0
info@wika.de
www.wika.de