Differential pressure gauge
Model 700.01, with magnetic piston
Model 700.02, with magnetic piston and separating diaphragm

WIKA data sheet PM 07.14

for further approvals see page 4

Applications

- For gaseous and liquid media that are not highly viscous or crystallising
- Filter systems
- Pump monitoring
- Cooling circuits
- Pipeline systems

Special features

- Differential pressure measuring ranges
  Model 700.01: 0 ... 400 mbar to 0 ... 10 bar
  Model 700.02: 0 ... 160 mbar to 0 ... 2.5 bar
- Compact system case from stainless steel, suitable for high working pressures (static pressures), optionally 100, 250 or 400 bar
- Overload safety either side to maximum working pressure
- System and indicator case exchangeable on-site
- Up to 2 reed contacts can be retrofitted and adjusted on-site

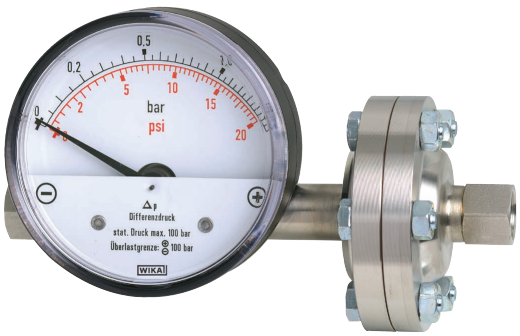

Fig. top: Model 700.01
Fig. below: Model 700.02, with separating diaphragm

Description

The model 700.01 is primarily used for monitoring differential pressures, even at high working pressures, in the gas and air preparation and supply industry.

The model 700.02 version with separating diaphragm is for liquid media and, thus, suitable for the water treatment and supply industries.

The compact and modular design of these differential pressure gauges enables the later exchange of the measuring system and scale range, as well as the retrofitting and adjustment of reed contacts on-site.

A panel mounting flange can be retrofitted to the model 700.01.

Although these models have a substantial overload safety up to the maximum working pressure, the weight of the standard versions is very low with approx. 220 g in the case of model 700.01 and approx. 500 g in the case of model 700.02. Thus, an economical and flexible solution to your measuring tasks is provided.

This compact design with a measuring system from stainless steel enables an optimal price-performance ratio.

Data sheets showing similar products:
Differential pressure gauge, compact version NS 80, class 2.5 to 4.0, high overload safety; see data sheet PM 07.12

Illustrations of the principle

Model 700.01

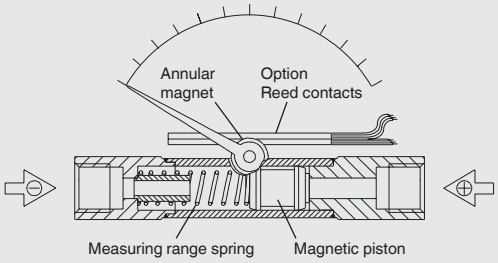

Model 700.02

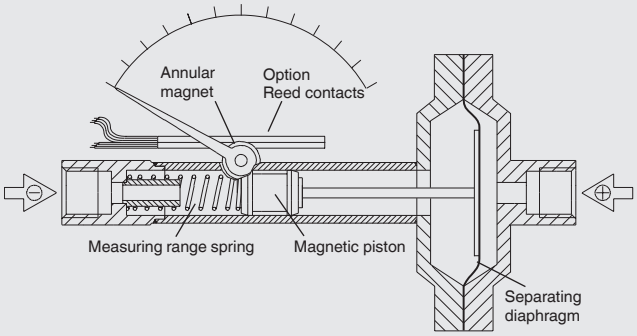

Design and operating principle

Pressures p_1 and p_2 act on the ⊕ and ⊖ side of the measuring chamber, separated by the pressure-loaded magnetic piston or magnetic piston with separating diaphragm for model 700.02.

The difference in pressure causes an axial movement (deflection) of the piston supported by the measuring range spring.

An annular magnet mounted on the instrument pointer follows the magnet integrated in the piston so that each piston position is assigned a defined position of the pointer.

This design enables the complete mechanical separation of the measuring system and the indication while eliminating any leakage to the outside.

With the model 700.01 the volume flow from the ⊕ to the ⊖ side in the measuring chamber is minimised by the mechanical design and will not interfere with standard processes.

For media with suspended solids or liquid media, the model 700.02 version with separating diaphragm must be provided, since there is no volume flow from the ⊕ to the ⊖ side of the measuring chamber.

Mounting according to affixed symbols
⊕ high pressure, ⊖ low pressure

Specifications

	Model 700.01	Model 700.02
Nominal size	80	
Indication accuracy	± 3 % of full scale value with increasing differential pressure	± 5 % of full scale value with increasing differential pressure
Scale ranges	0 … 400 mbar to 0 … 10 bar	0 … 160 mbar to 0 … 2.5 bar
Max. working pressure (static pressure)	■ 100 bar ■ 250 bar ■ 400 bar	■ 50 bar (scale ranges 0 ... 160 mbar and 0 ... 250 mbar) ■ 100 bar
Overload safety	either side to maximum working pressure	
Permissible temperature		
Ambient	0 ... +60 °C	
Medium	+100 °C maximum	
Ingress protection per IEC/EN 60529	IP54	
Wetted materials		
Measuring chamber with pressure connection	Stainless steel 1.4571, 2 x G ¼ female, on the right and left side, in-line (EN 837-1/7.3) ■ Other pressure connections via female or male threads ■ Lower mount or back mount, ⊕ connection left ■ Fine filter integrated into the ⊕ connection	
Pressure element	Compression spring, stainless steel 1.4310	
Magnetic piston	Piston: Stainless steel 1.4571, magnet: Hard ferrite	
Separating diaphragm	-	NBR

	Model 700.01	Model 700.02
Non-wetted materials		
Dial	Aluminium, white, lettering: Scale, outside black (bar), inside red (psi)	
Pointer	■ Aluminium, black ■ Maximum drag pointer	
Indicator case	Aluminium die-casting, black	
Window	Clear non-splintering plastic, snap-fitted in case	
Mounting	Mounting by means of: ■ Rigid measuring lines ■ Panel mounting flange (only with model 700.01) ■ Instrument mounting bracket for wall mounting	

Option reed contact, model 851.3 or 851.33

Reed contacts are suitable for the switching of both high powers (up to 60 watt) and also very low currents and voltages (e.g. PLC applications). With the contact adjustment screws, the reed contact can be set from outside in the range of 10 ... 100 % of the full scale value.

	Model 851.3	Model 851.33
Number of contacts	1 x change-over contact	2 x change-over contacts

Specifications	Contact versions	
Switching voltage DC or AC	≤ 250 V	≤ 30 V
Switching current	≤ 1 A	≤ 0.25 A
Maximum switching power	60 W/VA	3 W/VA
Switch hysteresis	≤ 10 % of full scale value	≤ 5 % of full scale value

For further information see data sheet AC 08.01, electrical switch contacts

Terminal assignment, cable socket

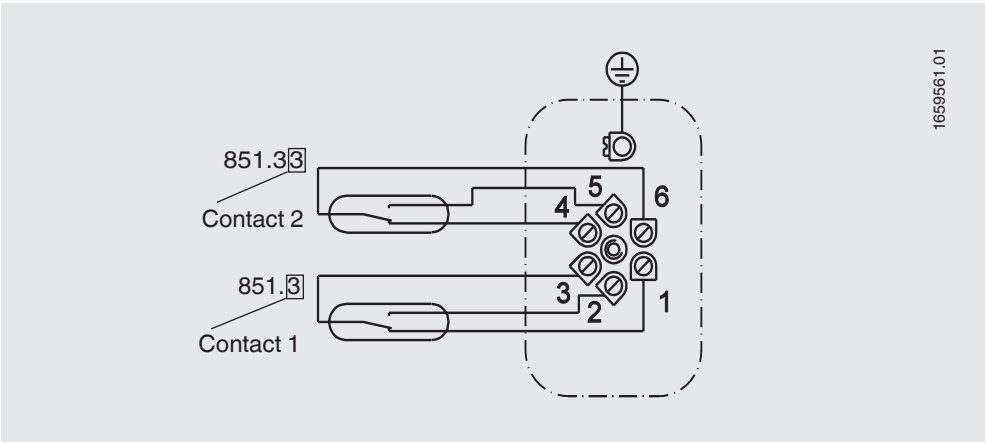

Approvals

Logo	Description	Country
	EAC (option) Pressure equipment directive	Eurasian Economic Community
	GOST (option) Metrology, measurement technology	Russia
	KazInMetr (option) Metrology, measurement technology	Kazakhstan
-	**MTSCHS (option)** Permission for commissioning	Kazakhstan
	BelGIM (option) Metrology, measurement technology	Belarus
	UkrSEPRO Metrology, measurement technology	Ukraine
	Uzstandard (option) Metrology, measurement technology	Uzbekistan
-	**CPA** Metrology, measurement technology	China
-	**CRN** Safety (e.g. electr. safety, overpressure, ...)	Canada

Certificates (option)

- 2.2 test report
- 3.1 inspection certificate

Approvals and certificates, see website

Dimensions in mm

Standard version, model 700.01

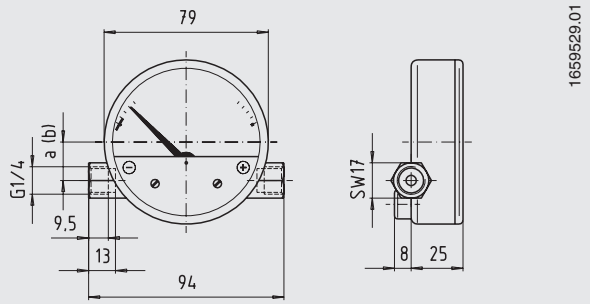

a = 18.5 ⊕ connection, right
b = 2.5 ⊕ connection, left

Standard version, model 700.02

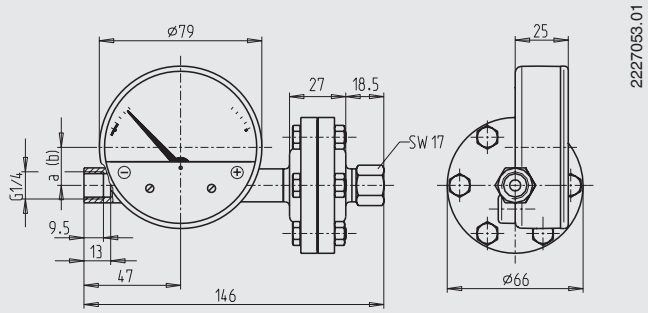

Option reed contacts (1- or 2-times change-over contact)

Model 700.01

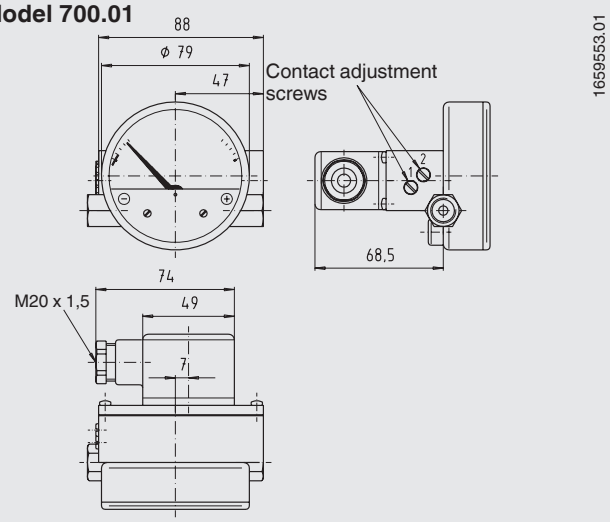

Model 700.02

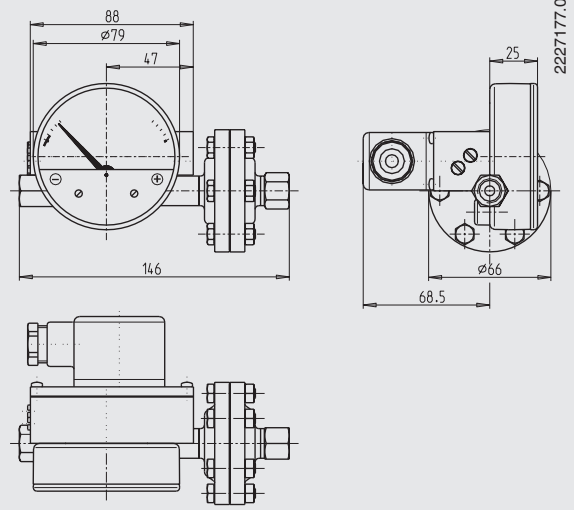

Option, panel mounting flange (only with model 700.01)

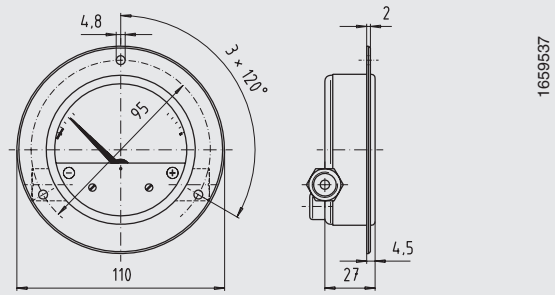

Ordering information

Model / Scale range / Scale / Process connection / Connection location / Overload limit (max. working pressure) / Options

Your WIKA Sales Partner

ICS SCHNEIDER MESSTECHNIK

ICS Schneider Messtechnik GmbH
Briesestrasse 59
D-16562 Hohen Neuendorf / OT Bergfelde
Tel.: +49 3303 5040-66
Fax: +49 3303 5040-68
E-Mail: info@ics-schneider.de

WIKA

WIKA Alexander Wiegand SE & Co. KG
Alexander-Wiegand-Straße 30
63911 Klingenberg/Germany
Tel. +49 9372 132-0
Fax +49 9372 132-406
info@wika.de
www.wika.de