Bilge float switch
For the shipbuilding industry
Model RLS-5000 (model with approval: SR 6)

for further approvals
see page 3

Applications

- Shipbuilding
- Bilge water management
- Applications with strong mechanical loading
- Contaminated media

Special features

- Robust stainless steel case to protect against mechanical damage
- Durable and resistant marine cable
- With manual test device (optional)

Bilge float switch with test device, model RLS-5000

Description

The model RLS-5000 bilge float switch is used for the monitoring of limit levels in shipbuilding (e.g. in bilge water tanks) and industrial applications. The robust stainless steel case and the durable marine cable outlet protect the float system even under high mechanical loading, e.g. due to flotsam such as sticks and pieces of wood. Inside the stainless steel case, a permanent magnet built into the float triggers, with its magnetic field, the potential-free reed contact built into the pipe.

The triggering of the reed contact by the permanent magnet is contact-free and thus free from wear. The reed switch function is freely definable as normally closed, normally open or change-over contact. In the event of maintenance, the optionally available test device enables the manual triggering of the float by a movable wire bracket.

With its optimised mechanical design and certification in accordance with the leading maritime standards, the RLS-5000 is particularly suitable for long-term and reliable use in shipbuilding applications.

Data sheets showing similar products:
Float switch; model RLS-1000; see data sheet LM 50.03
Float switch with temperature output; model RLS-3000; see data sheet LM 50.06
Float switch, intrinsic safety Ex i; model RLS-4000; see data sheet LM 50.07

Specifications

Bilge float switch, model RLS-5000	
Measuring principle	Potential-free switching reed contact is triggered by a magnet in the float.
Switching output	Alternatively normally open (NO), normally closed (NC) or change-over (SPDT) contact - on rising level
Switch position	see “Dimensions in mm (in)”
Switching power	Normally open, normally closed: AC 230 V; 100 VA; 1 A DC 230 V; 50 W; 0.5 A Change-over contact: AC 230 V; 40 VA; 1 A DC 230 V; 20 W; 0.5 A
Test device	For manual triggering of the float/switch contact (optional)
Accuracy	±3 mm switch point accuracy incl. hysteresis, non-repeatability
Electrical connection	Cable outlet, IP68 (8 m / 26,2 ft) Cable length freely definable in in m/ft
Protection class	II
Mounting position	Vertical ±30°
Process connection	Surface mounting lug with 2 drilled holes D = 7.0 mm (0,3 in) Hole centre spacing = 34 mm (1,3 in)
Material ■ Case, pipe, surface mounting lug, float ■ Cable	 Stainless steel 316Ti Marine cable, sheath material polyolefin
Permissible temperatures ■ Medium ■ Ambient ■ Storage	 -40 ... +80 °C (-40 ... +176 °F) -40 ... +80 °C (-40 ... +176 °F) -40 ... +80 °C (-40 ... +176 °F)
Process pressure	max. 16 bar (232 psi)
Medium density	≥ 750 kg/m^3 (46,8 lbs/ft^3)

Connection diagram

Cable outlet		
	Normally open/normally closed (NO/NC)	**Change-over contact (SPDT)**
		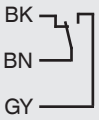

Legend

SP1 - SP3	Switch points	BU	Blue
WH	White	RD	Red
BN	Brown	BK	Black
GN	Green	VT	Violet
YE	Yellow	GYPK	Grey/Pink
GY	Grey	RDBU	Red/Blue
PK	Pink		

Electrical safety	
Insulation voltage	DC 2,120 V

Dimensions in mm (in)

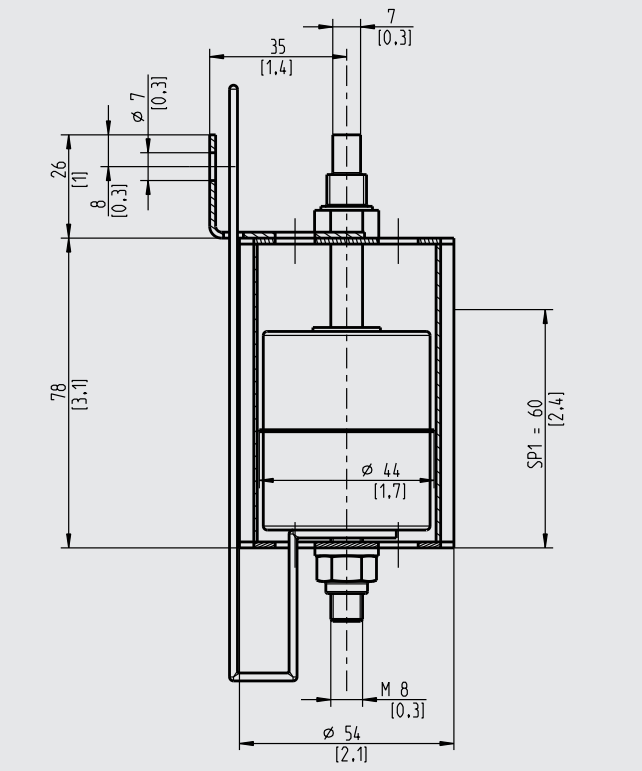

Weight: approx. 700 g (1,5 lbs) + 350 g/m (0,8 lbs/m) cable length

Approvals

Logo	Description	Country
CE	**EU declaration of conformity** ■ Low voltage directive ■ RoHS directive	European Union
	DNV GL Ships, shipbuilding (e.g. offshore)	International
	Lloyd's Register Ships, shipbuilding (e.g. offshore)	International

Approvals and certificates, see website

Manufacturer's information and certificates

Logo	Description
-	**China RoHS directive**

Ordering information

Model / Switching function / Cable length / Test device (optional)

12/2017 EN

Your WIKA Sales Partner

ICS Schneider Messtechnik GmbH
Briesestrasse 59
D-16562 Hohen Neuendorf / OT Bergfelde
Tel.: +49 3303 5040-66
Fax: +49 3303 5040-68
E-Mail: info@ics-schneider.de

WIKA Alexander Wiegand SE & Co. KG
Alexander-Wiegand-Straße 30
63911 Klingenberg/Germany
Tel. +49 9372 132-0
Fax +49 9372 132-406
info@wika.de
www.wika.de