Ultra high purity transducer
With integrated display and optional switch contacts
Models WUD-20, WUD-25 and WUD-26

WIKA data sheet PE 87.08

FM APPROVED

Applications

- Semiconductor, flat panel display and photovoltaic industry
- Ultrapure gas supply in semiconductor production systems

Special features

- High-accuracy pressure measurement 0.15 % RSS
- Excellent long-term stability
- Signal noise cancellation and shielding
- Vacuum-referenced pressure measurement
- Active temperature compensation

Fig. left: WUD-20, single end
Fig. centre: WUD-25, flow through
Fig. right: WUD-26, modular surface mount

Description

Reliable
The WUD-2x series ultra high purity transducers combine state-of-the-art transducer concepts with analogue output signals. Thus the safest and most accurate pressure measurements necessary for today's market requirements are provided.

Pressure measurement, based on a true vacuum reference, and electronic measures for interference shielding and signal noise cancellation ensure high-accuracy pressure measurement and excellent long-term stability.

Active temperature compensation reduces the impact of changing temperatures on the transducer, allowing safe operations even in applications with high fluctuations in temperature, e.g. Joule-Thomson effect in the case of gas expansion.

WUD-25 (flow through) and WUD-26 (surface mount) transducers are specifically designed to sustain torsion-applied stresses often incurred during installation. The special design of the thin-film sensor eliminates the risk of sensor failure due to loads at the process connection or welded joints.

Versatile
The WUD-2x can be readily installed in "on-tool" gas distribution systems. The bright LED display is rotatable and easy to read from any position.

Application-specific monitoring and control operations can be realised via two programmable switch outputs.

Compact
With its small footprint the WUD-2x is the most compact UHP transducer in the market. Thus it is optimally suited for installation in applications with limited mounting space, and even in existing plants it can be easily retrofitted.

Specifications

		WUD-20, WUD-25, WUD-26					WUD-20, WUD-25						
Measuring range	psi	30	60	100	160	250	350	500	1,000	1,500	2,000	3,000	5,000
	bar	2	4	7	11	17	25	36	70	100	145	225	360
Overload safety	psi	120	120	210	320	500	750	1,100	2,100	3,000	4,200	6,600	10,000
Burst pressure	psi	1,800	1,800	2,200	2,600	4,800	6,200	7,400	8,000	10,500	10,500	10,500	10,500
	Other measuring ranges and units (e. g. MPa, kg/cm²) on request Absolute pressure: 0 ... 2 bar to 0 ... 60 bar Vacuum pressure: -1 ... 1 bar to -1 ... 250 bar												
Measuring principle	Metal thin-film sensor												
Materials													
Wetted	Process connection: 316L stainless steel, according to SEMI F20 (option: 316L VIM/VAR) Sensor: 2.4711 / UNS R30003												
Case	Lower body: 304 SS Plastic components: PC/PBT Keyboard: TPE Display window: PC												
Inboard helium leak test	< 1 x 10^{-9} mbar l/sec (atm STD cc/sec) per SEMI F1												
Surface finish	Electropolished, typical Ra ≤ 0.13 µm (RA 5); max. Ra ≤ 0.18 µm (RA 7), per SEMI F19												
Dead volume	WUD-20 < 1.5 cm^3 WUD-25 < 1 cm^3 WUD-26 < 1 cm^3												
Permissible medium	Special gas, vapour, liquid												
Power supply U+	DC 10 ... 30 V (with output signal 4 ... 20 mA and DC 0 ... 5 V) DC 14 ... 30 V (with output signal DC 0 ... 10 V)												
Output signal and maximum load	4 ... 20 mA, 3-wire, R_A ≤ (U+ – 10 V) / 0.02 A DC 0 ... 5 V, 3-wire, R_A > 5 kΩ DC 0 ... 10 V, 3-wire, R_A > 10 kΩ												
Power P_{max}	1 W												
Current consumption	max. 50 mA												
Total current consumption	max. 250 mA (including switching current)												
Adjustability of zero point	-3.5 ... +3.5 % of span (via potentiometer) current output signal -2.0 ... +3.5 % of span (via potentiometer) current output signal												
Signal response (10 ... 90 %)	≤ 300 ms												
Switch points	Individually adjustable via external control keys												
Type	Transistor switching output NPN												
Quantity	1 or 2												
Function	Normally open, normally closed, on, off												
Switching current	SP1 / SP2: 100 mA												
Accuracy	≤ 0.5 % of span												
Display													
Version	7-segment LED, red, 4-digit, height 8 mm, 270° rotatable												
Accuracy	≤ 1.0 % of span ±1 digit												
Update	0.2 s / 0.5 s / 1 s / 5 s / 10 s / 60 s (adjustable)												
Accuracy	≤ 0.15 % of span (≤ 0.4 with measuring ranges ≤ 2 bar) RSS (root sum squares) ≤ 0.3 [1)] (≤ 0.6 [1)] with measuring ranges ≤ 2 bar)												
Non-linearity	≤ 0.1 % of span (≤ 0.15 with measuring ranges ≤ 2 bar) BFSL per IEC 61298-2												
Hysteresis	≤ 0.14 % of span												
Non-repeatability	≤ 0.12 % of span												
Stability per year	≤ 0.25 % of span (typical) at reference conditions (≤ 0.4 with measuring ranges ≤ 2 bar)												

1) Including non-linearity, hysteresis, zero offset and end value deviation (corresponds to measured error per IEC 61298-2)

Specifications	
Permissible temperature	
Medium	-20 ... +100 °C [-4 ... +212 °F]
Ambient	-10 ... +60 °C [14 ... +140 °F]
Storage	-10 ... +60 °C [14 ... +140 °F]
Rated temperature range (medium)	-20 ... +80 °C [-4 ... +176 °F] (actively compensated)
Temperature coefficients in rated temperature range (actively compensated)	
Mean TC of zero	≤ 0.10 % of span/10 K
Mean TC of span	≤ 0.15 % of span/10 K
Assembly and packaging area	Cleanroom class 5 per ISO 14644
Packaging	Double bagging per SEMI E49.6
Shock resistance	15 g (11 ms), 30 g (6 ms) per IEC 60068-2-27
Vibration resistance	7.5 mm or 2 g (1 ... 200 Hz) / 5 g (200 ... 500 Hz) per IEC 60068-2-6
Electrical safety	
Short-circuit resistance	S+ vs. U-
Reverse polarity protection	U+ vs. U-
Weight	approx. 0.2 kg

Output signal and permissible load

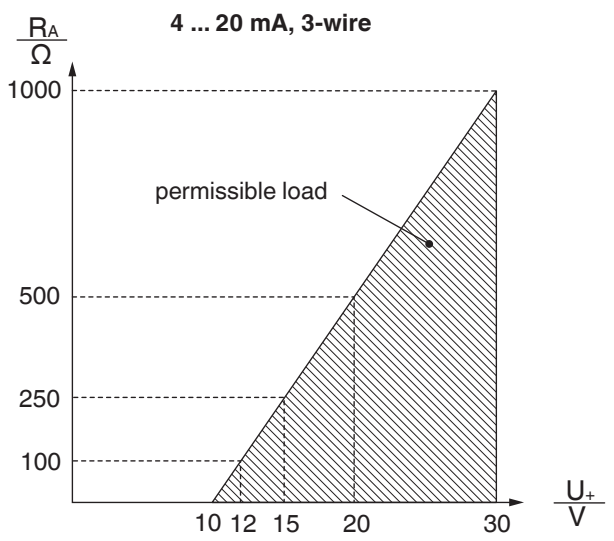

Current output (3-wire)
4 ... 20 mA: $R_A \leq (U+ - 10\ V) / 0.02\ A$

Voltage output (3-wire)
DC 0 ... 5 V: $R_A > 5\ k\Omega$
DC 0 ... 10 V: $R_A > 10\ k\Omega$

with R_A in Ohm and U+ in Volt

Electrical connections

	Bayonet connector 4-pin			Circular connector M12 x 1 4-pin			Circular connector M12 x 1 5-pin		
	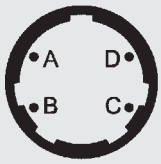								
3-wire	U+ = A	U- = D	S+ = B	U+ = 1	U- = 3	S+ = 4	U+ = 1	U- = 3	S+ = 4
Switching outputs	-			SP1 = 2			SP1 = 2, SP2 = 5		
Wire cross-section	-			-			-		
Cable diameter	-			-			-		
Ingress protection per IEC 60529	IP67			IP67			IP67		
	The stated ingress protection only applies when plugged in using mating connectors that have the appropriate ingress protection.								

Electrical connections

	Flying leads 1.5 m or 3 m			Sub-D HD connector 15-pin			Sub-D connector 9-pin		
				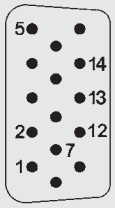			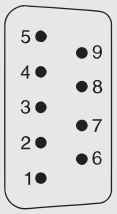		
3-wire	U+ = red	U- = black	S+ = brown	U+ = 7	U- = 5 U- = 12	S+ = 2	U+ = 4	U- = 8 U- = 9	S+ = 1
Switching outputs	SP1 = blue, SP2 = white			SP1 = 14, SP2 = 13			SP1 = 3, SP2 = 6		
Wire cross-section	0.15 mm^2			-			-		
Cable diameter	4.6 mm ± 0.2 mm			-			-		
Ingress protection per IEC 60529	IP65			IP20			IP20		
	The stated ingress protection only applies when plugged in using mating connectors that have the appropriate ingress protection.								

Dimensions in inch [mm] WUD-20

M12 connector

1/4" union nut

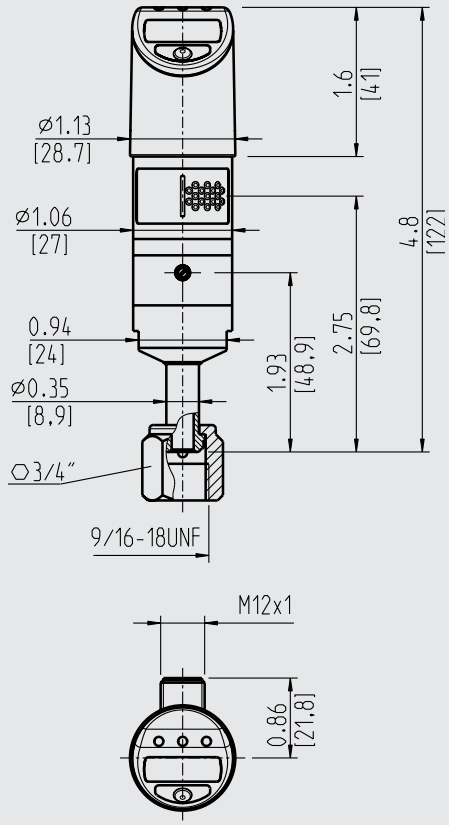

Process connections

1/4" weld stub [1)]

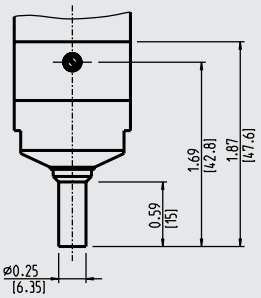

1/4" pressure screw, rotatable

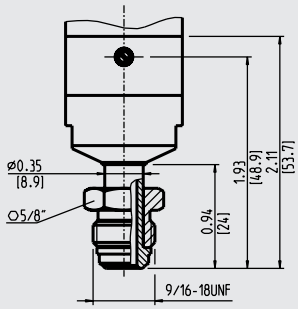

1/4" T-connector, weld stub

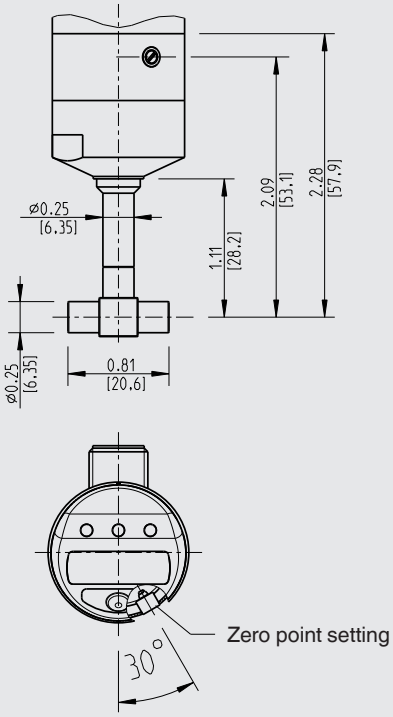

1) Maximum permissible pressure range of 300 psi for single-end units only

Dimensions in inch [mm] WUD-25

Flying leads

1/4" pressure screw, fixed
1/4" pressure screw, fixed

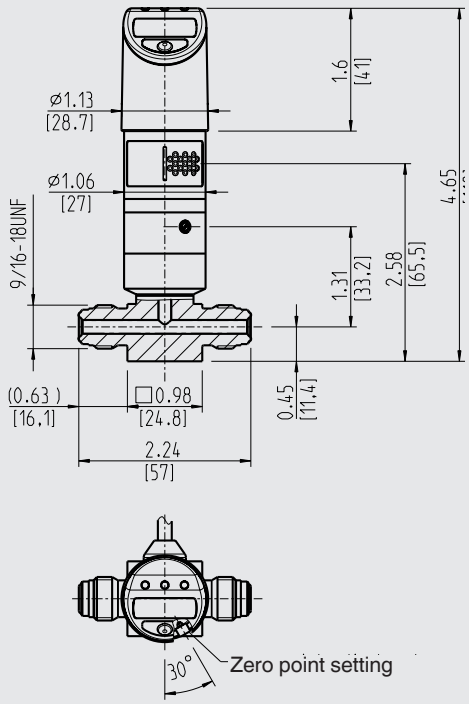

Process connections

1/4" union nut, rotatable
1/4" union nut, rotatable

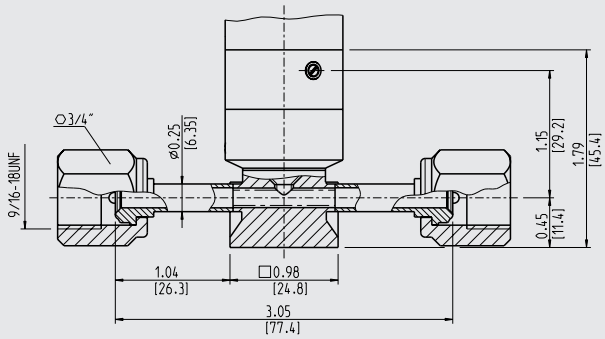

1/4" pressure screw, rotatable
1/4" pressure screw, rotatable

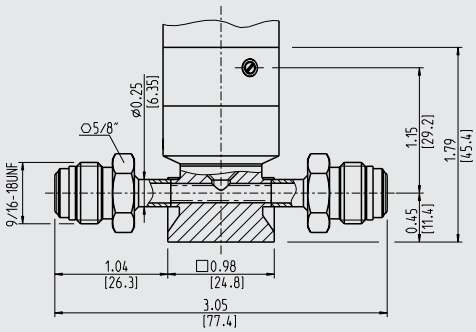

1/4" pressure screw, fixed, high flow through
1/4" weld stub
Only available with measuring ranges ≤ 25 bar / 300 psi

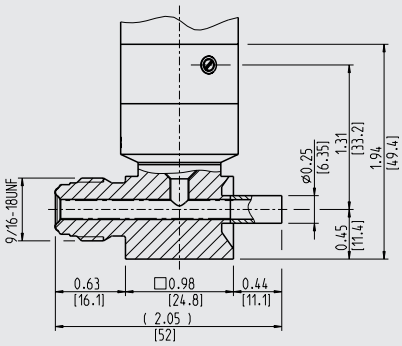

1/4" union nut, rotatable
1/4" pressure screw, rotatable

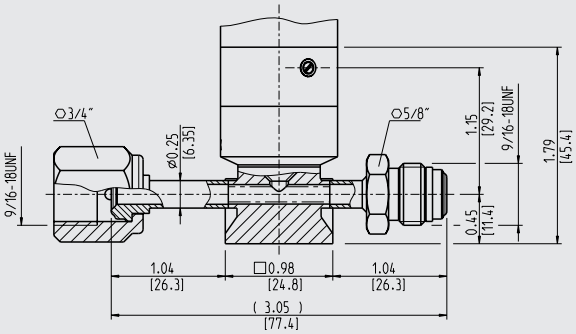

Dimensions in inch [mm] WUD-26

Sub-D connector

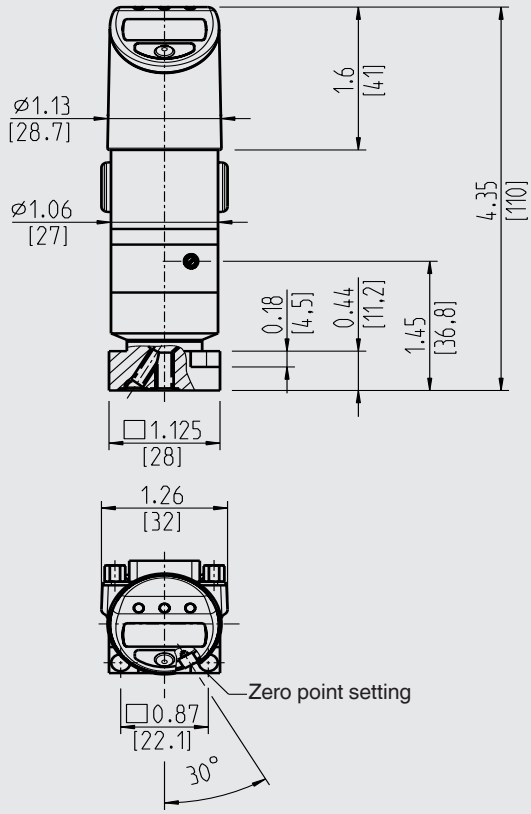

Process connections

MSM C 1 1/2"

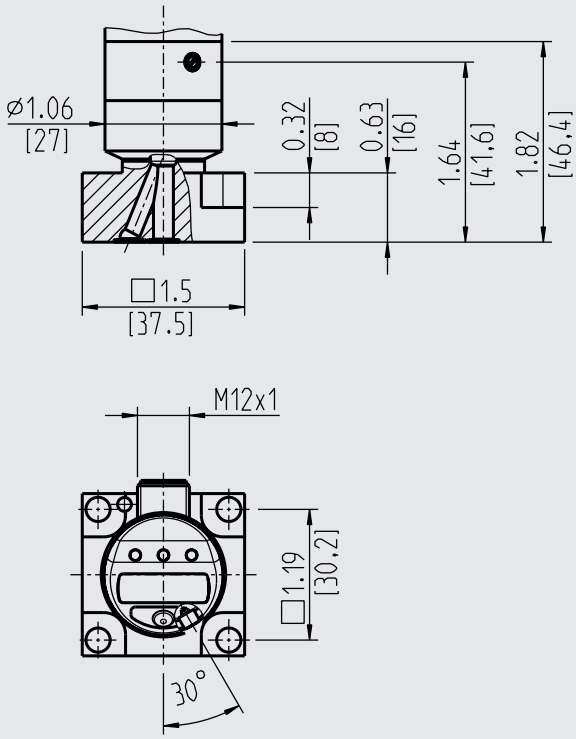

MSM C 1 1/8"

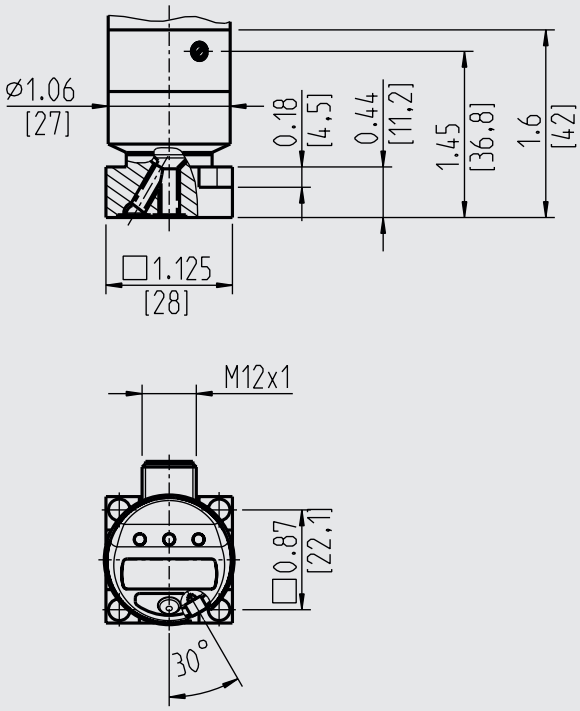

Approvals

Logo	Description	Country
CE	**EU declaration of conformity** ■ EMC directive EN 61326 emission (group 1, class B) and interference immunity (industrial application) ■ Pressure equipment directive ■ RoHS directive	European Union
FM APPROVED	**FM** Hazardous areas	USA

Approvals and certificates, see website

Your WIKA Sales Partner

ICS SCHNEIDER MESSTECHNIK

ICS Schneider Messtechnik GmbH
Briesestrasse 59
D-16562 Hohen Neuendorf / OT Bergfelde
Tel.: +49 3303 5040-66
Fax: +49 3303 5040-68
E-Mail: info@ics-schneider.de

WIKA

WIKA Alexander Wiegand SE & Co. KG
Alexander-Wiegand-Straße 30
63911 Klingenberg/Germany
Tel. +49 9372 132-0
Fax +49 9372 132-406
info@wika.de
www.wika.de