Orifice plate, model FLC-OP
Orifice flange, model FLC-FL
Annular chamber, model FLC-AC

Applications

- Power generation
- Oil production and refining
- Water treatment and distribution
- Gas processing and transmission
- Chemical and petrochemical industries

Special features

- Max. operating temperature and pressure limited by material and flange
- Suitable for liquid, gas and steam flow measurement
- Accuracy ≤ ±0.5 % of actual flow rate
- Repeatability of measurement of 0.1 %



Orifice plate, model FLC-OP



Orifice flange, model FLC-FL



Annular chamber, model FLC-AC

Description

Easy installation and handling
Differential pressure flow meters are used in many technical applications. As primary flow elements, orifice plates represent the most common solution. Orifice plates are notable for their easy installation and management.

The differential pressure generated by the primary flow element is normally transformed into an electrical signal proportional to the flow rate by a differential pressure transmitter.

Optimised to customer requirements
Our primary flow elements are optimised with respect to customers' requirements and therefore match the respective final applications perfectly. The design of the bore is matched ideally to the particular characteristics of the plant.
Our products are available with RF, FF or RTJ sealing faces. For special applications, designs in accordance with customer standards can also be provided.

ICS SCHNEIDER MESSTECHNIK
WIKA Part of your business

Orifice plates, model FLC-OP

Description
Orifice plates are the simplest type of primary flow elements. Their bore diameter is calculated to generate the specified differential pressure at full scale flow rate. Suitable orifice plates are available for a wide range of different media.

Materials
- Stainless steel (standard)
- Hastelloy C276
- Monel 400
- Duplex
- Super Duplex

Others on request



Fig. left: **Eccentric orifice plate**
Fig. right: **Quarter circle orifice plate**

Overview

Medium		Square edge orifice plate	Quarter circle or conical entrance orifice plate	Eccentric orifice plate	Segmental orifice plate
Gas	clean	++	-	+	+
	dirty	-	-	++	++
Liquid	clean	++	++	+	+
	viscous	-	++	-	-
	dirty	+	+	++	++
	corrosive	+	+	+	+
Steam		+	+	+	-

++ preferred + suitable - not suitable

Square edge orifice plate

This design is intended for general applications with clean liquids and gases.

Design:	per ISO 5167-2
Nominal size:	≥ 2" (50 mm)
Nominal pressure rating:	as per customer requirements
Beta ratio:	0.20 ... 0.75
Accuracy:	≤ ±0.5 % of full scale flow rate
Repeatability:	0.1 % of flow rate

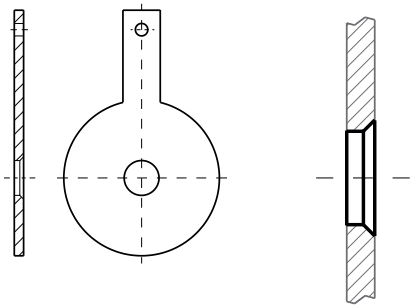

Quarter circle and conical entrance orifice plate

This version is the best choice for liquids with a low Reynolds number.

Design:	per ISO/TR 15377
Nominal size:	≥ 2" (50 mm)
Nominal pressure rating:	as per customer requirements
Beta ratio:	0.100 ... 0.316 (conical entrance) 0.245 ... 0.600 (quarter circle)
Accuracy:	≤ ±2 % of full scale flow rate
Repeatability:	0.1 % of flow rate

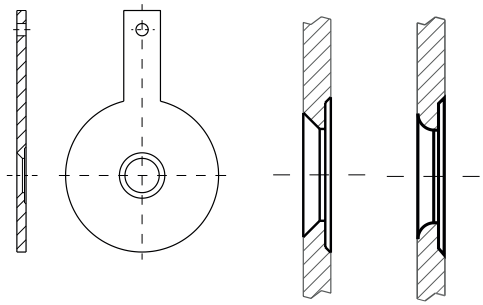

Eccentric orifice plate

For measurements with two-phase, dirty and particle-laden media. However, for small pipe diameters an eccentric orifice plate is a better solution than a segmental orifice plate.

Design:	per ISO/TR 15377
Nominal size	> 4" (100 mm)
Nominal pressure rating:	as per customer requirements
Beta ratio:	0.46 ... 0.84
Accuracy:	β < 0.316: ±2.5 % full scale flow rate β ≥ 0.316: ±2.0 % of full scale flow rate
Repeatability:	0.1 % of flow rate

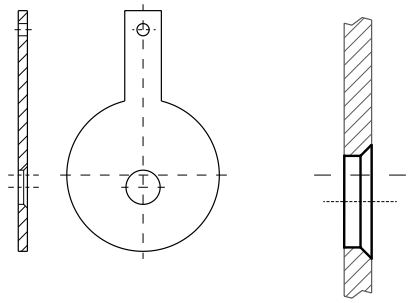

Segmental orifice plate

For measurements with two-phase, dirty and particle-laden media.

Design:	per ISO/ASME:
Nominal size	≥ 4" (100 mm)
Nominal pressure rating:	as per customer requirements
Beta ratio:	0.35 ... 0.80
Accuracy:	≤ ±1 ... 2 % of full scale flow rate
Repeatability:	0.1 % of flow rate

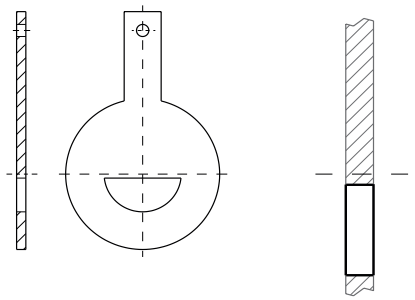

Sealing face for flanges with raised face (RF-raised face)

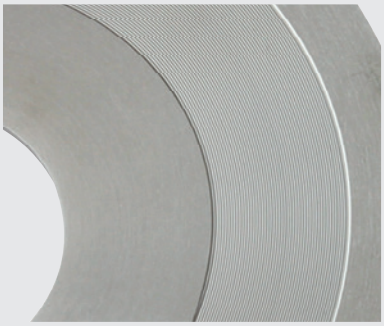
Sealing face for raised face

Description
Raised face (RF) is the most common sealing and can be used under uncritical pressure and temperature conditions.

Surface finishing
125 ... 250 AARH

The ANSI accredited ASME standard B 16.5 requires that the flange face and the sealing face of the orifice plate have a specified roughness to ensure the compatibility of the surface with the gasket and a high quality seal.

Ring joint gasket (option)

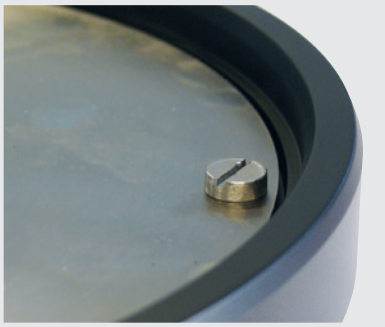
Ring joint gasket

Description
This solution is used under high temperature and pressure conditions

Versions
- Octagonal
- Oval

Surface finishing and ring dimensions
The ring joint gasket can be manufactured in accordance with all relevant standards to suit the following flange standards:
- API 6A
- ASME/ANSI B16.5
- ASME B16.47 series A
- BS 1560

The surface finishing of the ring joint gasket (< 63 AARH) complies with these flange standards.

Drain or vent hole (option)

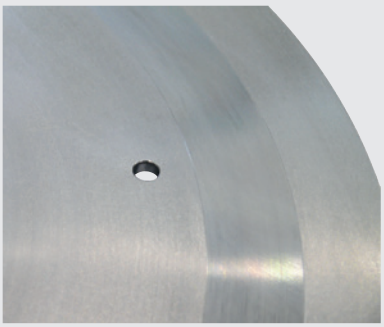
Drain or vent hole

Depending on the medium a drain or vent hole may be required. The bore is designed in accordance with the relevant international standards and our experience.

Dimensions of orifice plates for flanges with raised face (RF)

Nominal size [D]	Plate thickness (standard) [t]
2 ... 6"	3 mm
8 ... 14"	6 mm
16 ... 24"	10 mm
> 26"	16 mm

The listed values are suitable for a differential pressure of 1,000 mbar.

Other plate thickness on request.

Orifice flanges, model FLC-FL

Description
For the mounting of orifice plates or flow nozzles, instead of pipe flanges, special orifice flanges are used.
Orifice flanges feature pairs of pressure tappings which are machined directly into the orifice flange. This has the advantage of dispensing with any orifice carriers or pressure tappings in the pipe wall.
The assembly of the orifice plate is completed with jacking screws to ensure an easy removal.



Orifice flange with orifice plate

Nominal size
Available in accordance with all relevant standards.

Nominal pressure rating
Available in accordance with all relevant standards.

Pipe schedule
The pipe schedule must be specified by the customer.

Materials
- Carbon steel, ASTM A105
- Low temperature carbon steel, ASTM A350 LF2
- ASTM A182 F316
- ASTM A182 F304
- ASTM A182 F11
- ASTM A182 F22
- Duplex
- Super Duplex

Others on request

Pressure tappings
Two ½ NPT threads are provided in each flange as standard (one pressure tapping is sealed with a plug).
Other amount and types of threads on request.

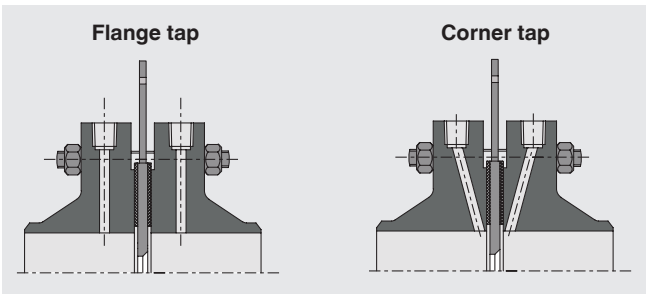

Sealing faces

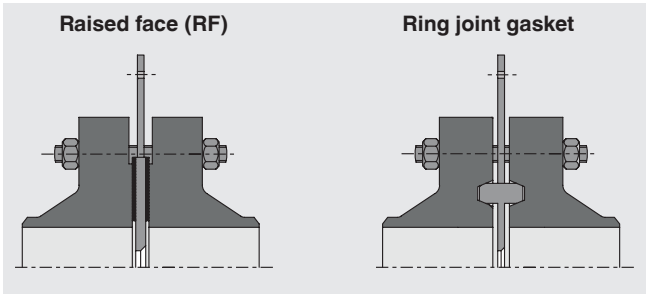

Dimensions and weight

Standard dimensions per ASME B16.36

DN	Class 300			Class 600			Class 900			Class 1500		
	Weight kg	L mm	E_D mm	Weight kg	L mm	E_D mm	Weight kg	L mm	E_D mm	Weight kg	L mm	E_D mm
1"	9	171	124	9	171	124	13	171	149	13	171	149
1 ½"	13	178	155	13	178	155	18	184	178	18	184	178
2"	14	178	165	14	178	165	29	209	216	29	209	216
2 ½"	18	184	191	18	284	191	41	215	244	41	215	244
3"	21	184	210	21	184	210	34	209	241	58	241	267
4"	31	190	245	41	209	273	59	235	292	82	254	311
6"	50	206	318	82	241	356	120	285	381	186	349	394
8"	73	232	381	124	276	419	204	333	470	306	435	483
10"	100	244	445	208	314	508	291	377	546	500	517	584
12"	151	269	521	250	320	559	405	409	610	746	574	673
14"	207	294	584	-	339	603	-	434	641	-	606	749
16"	275	301	648	-	365	686	-	441	705	-	631	826
18"	341	327	711	-	377	743	-	466	787	-	663	914
20"	408	333	775	-	390	813	-	504	857	-	720	984
24“	604	345	914	-	415	940	-	593	1.041	-	822	1.168

Values approx weight (kg) and dimensions (mm) for the assembly assuming a gasket with a thickness of 1.5 mm and a plate thickness in accordance with our standard.

Example: Flange with raised face (RF) and flange tap

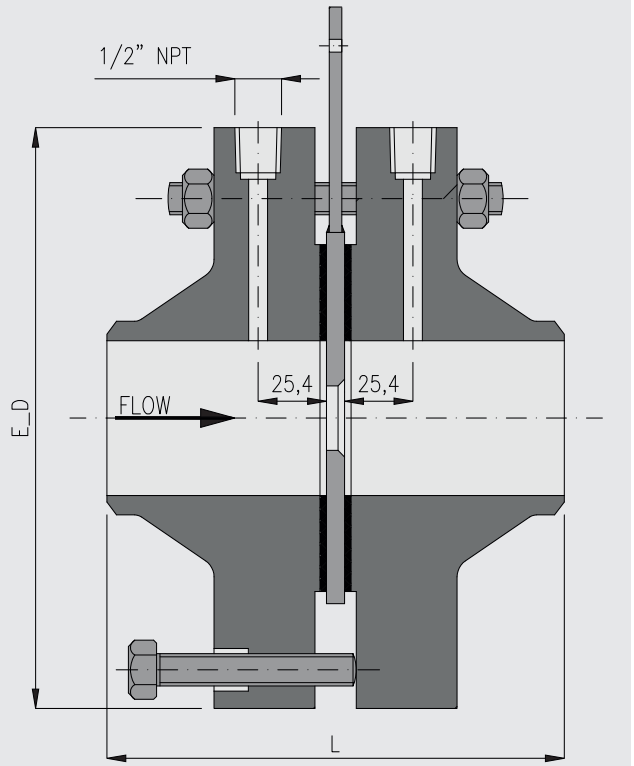

Annular chambers, model FLC-AC

Description
Annular chambers are used to achieve stable measurements under difficult process conditions. They are mounted between already installed process flanges. The different pressure in the pipe is compensated for by using a gap located between the interior of the pipe and the annular chamber.

Nominal size
Available in accordance with all relevant standards.

Nominal pressure rating
Available in accordance with all relevant standards.

Pipe schedule
The pipe schedule must be specified by the customer.

Materials
Annular chambers can be delivered in a wide range of materials.
Material of the orifice plate: Stainless steel 316/316L, other materials on request.

Pressure tappings
Two ½ NPT threads are provided in each carrier ring as standard (one pressure tapping is sealed with a plug).
Other amount and type of threads on request.

Sealing face
The sealing face must be specified by the customer.

Dimensions
The dimension of the annular chamber corresponds to the standard used for the process flange.



Annular chambers

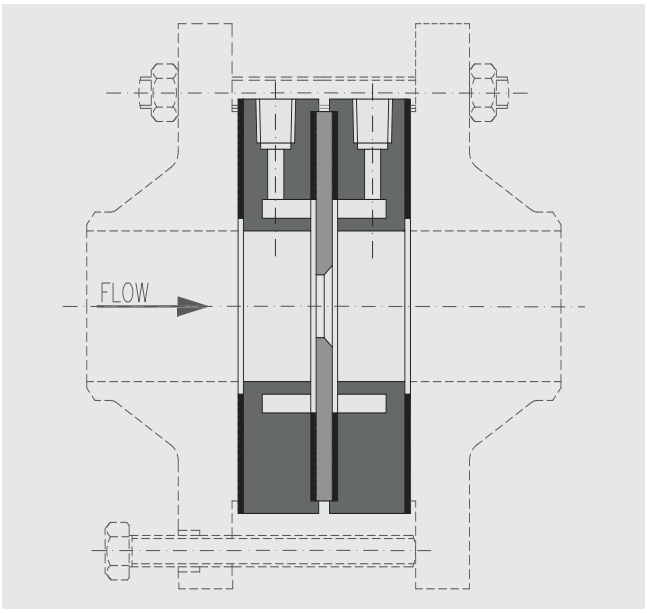

Ordering information

- **Orifice plate (model FLC-OP)**
  Nominal size / Nominal pressure rating / Version / Sealing face / Drain or vent hole / Material

- **Orifice flange (FLC-FL)**
  Nominal size / Pipe schedule / Nominal pressure rating / Sealing face / Pressure tappings / Material

- **Annular chamber (FLC-AC)**
  Nominal size / Pipe schedule / Nominal pressure rating / Sealing face / Pressure tappings / Material

© 08/2013 WIKA Alexander Wiegand SE & Co. KG, all rights reserved.
The specifications given in this document represent the state of engineering at the time of publishing.
We reserve the right to make modifications to the specifications and materials.

ICS Schneider Messtechnik GmbH
Briesestrasse 59
D-16562 Hohen Neuendorf / OT Bergfelde
Tel.: +49 3303 5040-66
Fax: +49 3303 5040-68
E-Mail: info@ics-schneider.de

WIKA Alexander Wiegand SE & Co. KG
Alexander-Wiegand-Straße 30
63911 Klingenberg/Germany
Tel. +49 9372 132-0
Fax +49 9372 132-406
info@wika.de
www.wika.de