Restriction orifice
Model FLC-RO-ST, single-step restriction orifice
Model FLC-RO-MS, multi-step restriction orifice

Applications

- Power generation
- Oil production and refining
- Water treatment and distribution
- Gas processing and transmission
- Chemical and petrochemical industries



Single-step restriction orifice, model FLC-RO-ST

Special features

- Suitable for liquids, gases and steam
- Single- and multi-step designs

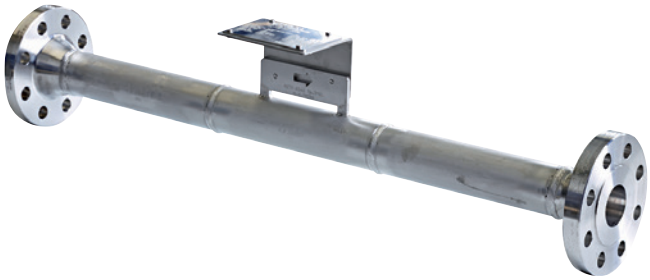

Multi-step restriction orifice, model FLC-RO-MS

Description

When a reduction of pressure or a limitation of the flow rate is required, a restriction orifice must be installed into the pipeline. The restriction orifice is adapted to the individual customer and flow requirements.

For applications in which a high differential pressure is required and/or the sound level shall be limited to prescribed limits, multi-step restriction orifices are the best solution. The multi-step restriciton orifices can be designed to meet all requirements.



Multi-step restriction orifice with variable sections, model FLC-RO-MS

ICS SCHNEIDER MESSTECHNIK

WIKA Part of your business

Specifications

Nominal size and pipe schedule
All nominal sizes are available in accordance with relevant standards.
The pipe schedule must be specified by the customer.

Nominal pressure rating
Available in accordance with all relevant standards.

Materials
- Stainless steel 316/316L
- Stainless steel 304/304L
- Super austenitic stainless steel
- Monel 400
- Duplex
- Super Duplex
- Hastelloy C276

Sealing face
The restriction orifice can be designed to be mounted between flanges with raised face (RF) in accordance with ANSI B16.5 or EN standards.

Restriction orifices to be mounted between RTJ flanges are available as male and female ring-type joint designs per ANSI B16.5 and API.

Plate thickness
The plate thickness (min. 3 mm) is calculated taking the differential pressure and the pipe size into account in order to prevent the plate from bending under operating conditions.

During the design phase a detailed calculation is performed.

Nominal size
½ ... 24"

Other versions on request.

Schematic drawings

Single-step restriction orifice (single-bore plate)

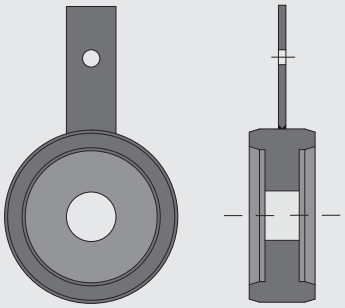

Single-step restriction orifice (multi-bore plate)

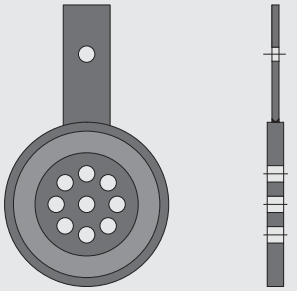

Multi-step restriction orifice

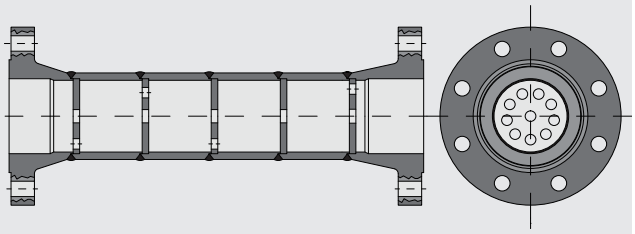

Multi-step restriction orifice with variable sections

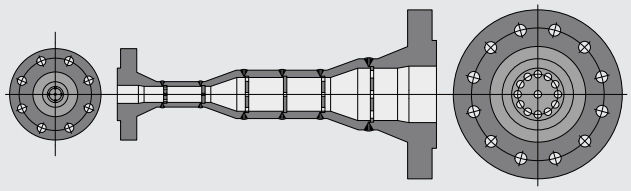

Versions

The restriction orifice is designed taking the medium characteristics, the pressure loss and the process data into account. Thanks to our long-standing experience we will find the right solution for your application to avoid the following problems:

- **Sonic and choke conditions**
  Our in-house software is able to calculate the maximum differential pressure generated to achieve the sonic condition.

- **Noise level**
  By increasing the number of bores the noise level generated by the restriction will be reduced. The noise level achieved can be calculated on request.

  The maximum acceptable noise level depends on the installation and service conditions. Our upper limit for the noise level is defined by the health and safety requirements applicable to the plant (usually 85 dB(A) for continuous operation).

  An important aspect are the conditions under which the restrictor is used, for example:
  - Continuous operation
  - Intermittent operation
  - Emergency operation

- **Cavitation**
  The only way to avoid the cavitation is to reduce the pressure in several steps. The number of steps is related to the operating conditions of the plant.
  The distance of the plates is calculated automatically by our software to ensure a complete pressure recovery. The plate thickness is only calculated from the differential pressure generated. If required, hardfacing bores are also possible.

Ordering information

Nominal size / Pipe schedule / Nominal pressure rating / Sealing face / Material / Process data / Medium characteristics

© 08/2013 WIKA Alexander Wiegand SE & Co. KG, all rights reserved.
The specifications given in this document represent the state of engineering at the time of publishing.
We reserve the right to make modifications to the specifications and materials.

ICS Schneider Messtechnik GmbH
Briesestrasse 59
D-16562 Hohen Neuendorf / OT Bergfelde
Tel.: +49 3303 5040-66
Fax: +49 3303 5040-68
E-Mail: info@ics-schneider.de

WIKA Alexander Wiegand SE & Co. KG
Alexander-Wiegand-Straße 30
63911 Klingenberg/Germany
Tel. +49 9372 132-0
Fax +49 9372 132-406
info@wika.de
www.wika.de