Ultra high purity transducer
For applications in hazardous areas, Ex nA ic
Models WU-20, WU-25 and WU-26

Applications

- Gas panels for OEM tools
- Semiconductor, flat panel display and photovoltaic industry
- Special and bulk-gas supply

Special features

- High-accuracy pressure measurement 0.15 % RSS
- Excellent long-term stability
- Signal noise cancellation and shielding
- Active temperature compensation
- ATEX and IECEx zone 2 approval
  Class I, div. 2, groups A, B, C and D



Fig. left: **WU-20, single end**
Fig. centre: **WU-25, flow through**
Fig. right: **WU-26, modular surface mount**

Description

Reliable
The WU-2x series combines state-of-the-art digital transducer concepts with analogue-like output signals, in order to provide the safest and most accurate pressure measurements necessary for today's market requirements.

Pressure measurement, based on a true vacuum reference, and electronic measures for interference shielding and signal noise cancellation ensure high-accuracy pressure measurement and excellent long-term stability.

Active temperature compensation reduces the impact of changing temperatures on the transducer, allowing safe operations even in applications with high fluctuations in temperature, e.g. Joule-Thomson effect in the case of gas expansion.

The model WU-25 (flow through) and model WU-26 (surface mount) transducers are specifically designed to sustain torsion-applied stresses often incurred during installation. The special design of the thin-film sensor eliminates the risk of sensor failure due to loads at the process connection or welded joints.

Versatile
The model WU-2x transducer can be readily installed in indoor or outdoor systems as well as in non-flammable or potentially flammable areas. The hermetically sealed design of the model WU-2x prevents the ingress of humidity.

Approvals for non-flammable and potentially flammable environments ensure a long service life and a high level of product safety. Instruments for temperature class T6 meet the high requirements for low, spontaneous ignition temperature media (phosphine (PH3) and silane (SiH4)).

Compact
With its small footprint the model WU-2x is the most compact UHP transducer in the market. Thus it is optimally suited for installation in applications with limited mounting space and even in existing plants it can be easily retrofitted.

Data sheets showing similar products:
Ultra high purity transducer for applications in hazardous areas, Ex nA ic; models WUC-1x; see data sheet PE 87.06
Ultra high purity transducer with integrated display and optional switch contacts; models WUD-2x; see data sheet PE 87.08

WIKA
Part of your business

Specifications

Accuracy specifications	
Non-linearity per BFSL per IEC 61298-2	
For measuring ranges > 2 bar	≤ 0.1 % of span
For measuring ranges ≤ 2 bar	≤ 0.15 % of span
Accuracy	→ See “Max. measuring deviation”
Max. measuring deviation	
RSS (root sum squares)	■ ≤ 0.15 % of span ■ ≤ 0.4 % of span with measuring ranges ≤ 2 bar
Per IEC 61298-2	■ ≤ 0.3 % of span ■ ≤ 0.6 % of span with measuring ranges ≤ 2 bar
Zero point setting	
Current output	-3.5 ... +3.5 % of span (via potentiometer)
Voltage output	-2 ... +3.5 % of span (via potentiometer)
Non-repeatability per IEC 61298-2	≤ 0.12 % of span
Mean temperature coefficient at -20 ... +80 °C [-4 ... +176 °F] (actively compensated)	
Zero point	≤ 0.1 % of span/10 K
Span	≤ 0.15 % of span/10 K
Long-term drift per IEC 61298-2	
Typical	≤ 0.25 % of span, at reference conditions
Measuring ranges ≤ 2 bar	≤ 0.4 % of span
Reference conditions	Per IEC 61298-1

Measuring ranges, model WU-20 and model WU-25

bar	psi
0 ... 2	0 ... 30
0 ... 4	0 ... 60
0 ... 7	0 ... 100
0 ... 11	0 ... 160
0 ... 17	0 ... 250
0 ... 25	0 ... 350
0 ...36	0 ... 500
0 ... 70	0 ... 1,000
0 ... 100	0 ... 1,500
0 ... 145	0 ... 2,000
0 ... 225	0 ... 3,000
0 ... 360	0 ... 5,000

Measuring ranges, model WU-26

bar	psi
0 ... 2	0 ... 30
0 ... 4	0 ... 60
0 ... 7	0 ... 100
0 ... 11	0 ... 160
0 ... 17	0 ... 250

Other measuring ranges on request.

Further details on: Measuring range	
Overpressure limit	■ 2-fold ■ 4-fold for measuring range 0 ... 2 bar [0 ... 30 psi]

Output signal		
Signal type	■ 4 ... 20 mA, 2-wire ■ DC 0 ... 5 V, 3-wire ■ DC 0 ... 10 V, 3-wire	
Load in Ω		
4 ... 20 mA	≤ (U+ – 10 V) / 0.02 A	
DC 0 ... 5 V	> 5 kΩ	
DC 0 ... 10 V	> 10 kΩ	
Voltage supply		
Supply voltage	Output signal DC 0 ... 5 V / 4 ... 20 mA	DC 10 ... 30 V
	Output signal DC 0 ... 10 V	DC 14 ... 30 V
Power P_{max}	1 W	
Dynamic behaviour		
Rise time (10 ... 90 %)	≤ 300 ms	

Electrical connection				
Connection type	**IP code** [1]	**Wire cross-section**	**Cable diameter**	**Cable lengths**
Bayonet connector (4-pin)	IP67	-	-	-
Circular connector M12 x 1 (4-pin)	IP67 (NEMA 4)	-	-	-
Cable outlet	IP67 (NEMA 4)	0.22 mm^2 (AWG 24)	4.8 mm	■ 1.5 m [5 ft] ■ 3 m [10 ft]
Sub-D connector (9-pin)	IP54	-	-	-
Sub-D HD connector (15-pin)	IP54	-	-	-

1) The stated IP codes only apply when plugged in using mating connectors that have the appropriate IP code.

Further details on: Electrical connection	
Connection type	→ See above
Wire cross-section	→ See above
Cable diameter	→ See above
Cable length	→ See above
Pin assignment	→ See below
Ingress protection (IP code) per IEC 60529	→ See above
Short-circuit resistance	S+ vs. U- (short time)
Reverse polarity protection	U+ vs. U-
Insulation voltage	DC 500 V

Pin assignment

Bayonet connector (4-pin)			
		2-wire	3-wire
	U_+	A	A
	U_-	D	D
	S_+	-	B

Circular connector M12 x 1 (4-pin)			
		2-wire	3-wire
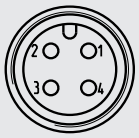	U_+	1	1
	U_-	3	3
	S_+	-	4

Cable outlet			
		2-wire	3-wire
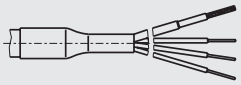	U_+	Red	Red
	U_-	Black	Black
	S_+	-	Brown

Sub-D connector (9-pin)			
		2-wire	3-wire
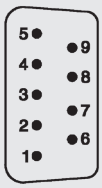	U_+	4	4
	U_-	8/9	8/9
	S_+	-	1

Sub-D HD connector (15-pin)			
		2-wire	3-wire
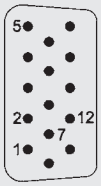	U_+	7	7
	U_-	5/12	5/12
	S_+	-	2

Legend

U_+ Positive power supply terminal
U_- Negative power supply terminal
S+ Positive output terminal

Material	
Material (wetted)	
Process connection	■ 316L per SEMI F20 ■ 316L VIM/VAR
Thin-film sensor	2.4711 / UNS R30003
Material (in contact with the environment)	
Case	304 SS
Surface treatment	Electropolished per SEMI F19
Surface roughness Ra	
Typical	≤ 0.13 µm (RA 5)
Maximum	≤ 0.18 µm (RA 7)

For the verification of material quality and origin in accordance with SEMI F20-0706, a certificate in accordance with EN 10204 clause 3.1 can be issued on request, with or without a sub-supplier certificate.

Operating conditions	
Permissible media	■ Speciality gases ■ Vapours ■ Liquids
Helium leak test	< 1 x 10^{-9} mbar l/sec (atm STD cc/sec) per SEMI F1
Vibration resistance per IEC 60068-2-6	0.35 mm (10 ... 58 Hz) / 5 g (58.1 ... 2,000 Hz)
Shock resistance per IEC 60068-2-27	500 g (1.5 ms)

Further details on: Operating conditions				
Permissible temperature ranges	**Non-Ex**	**T4**	**T5**	**T6**
Medium temperature limit	-20 ... +100 °C [-4 ... +212 °F]	-20 ... +85 °C [-4 ... +185 °F]	-20 ... +60 °C [-4 ... +140 °F]	-20 ... +40 °C [-4 ... +104 °F]
Ambient temperature limit	-20 ... +85 °C [-4 ... +185 °F]	-20 ... +85 °C [-4 ... +185 °F]	-20 ... +60 °C [-4 ... +140 °F]	-20 ... +40 °C [-4 ... +104 °F]
Storage temperature limit	-40 ... +100 °C [-40 ... +212 °F]	-20 ... +85 °C [-4 ... +185 °F]	-20 ... +85 °C [-4 ... +185 °F]	-20 ... +85 °C [-4 ... +185 °F]

Packaging and instrument labelling	
Packaging	Double bagging per SEMI E49.6
Assembly and packaging location	Clean room class 5 per ISO 14644
Instrument labelling	WIKA product label, glued

Approvals

Logo	Description	Country
CE Ex	**EU declaration of conformity**	European Union
	EMC directive EN 61326 emission (group 1, class B) and immunity (industrial application)	
	Pressure equipment directive	
	RoHS directive	
	ATEX directive (option) Hazardous areas - Ex n Zone 2 gas [II 3G Ex nA ic IIC T4/T5/T6 Gc X] [II 3G Ex ec ic IIC T4/T5/T6 Gc X]	
IEC IECEx	**IECEx (option)** Hazardous areas - Ex n Zone 2 gas [Ex nA ic IIC T4/T5/T6 Gc] [Ex ec ic IIC T4/T5/T6 Gc]	International
FM APPROVED	**FM (option)** Hazardous areas - Nonincendive apparatus for use in class I, division 2, groups A,B,C,D - Nonincendive for use in class I, zone 2, group IIC (classified) locations	USA

→ For approvals and certificates, see website

Safety-related characteristic values

Safety-related characteristic values	
MTTF	> 100 years

Dimensions in inch [mm], model WU-20

Bayonet connector

¼" union nut, rotatable

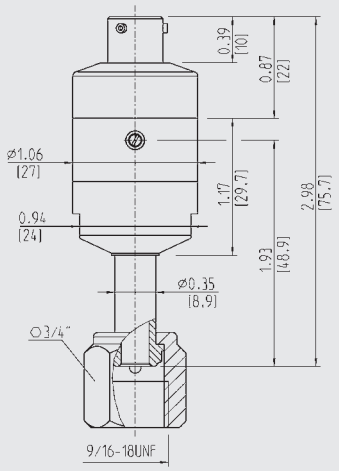

Weight: approx. 0.1 kg
Dead volume: < 1.5 cm³

Process connections

¼" weld stub

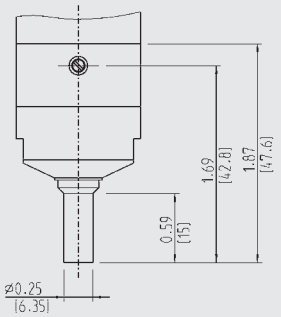

Max. available pressure: 300 psi

¼" pressure screw, rotatable

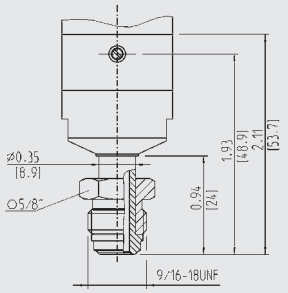

¼" T-connector, weld stub

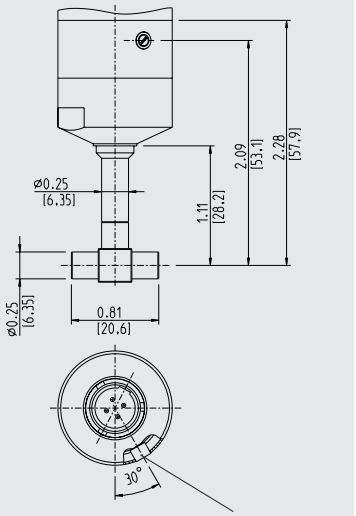

Potentiometer for zero point adjustment

Dimensions in inch [mm], model WU-25

Bayonet connector

¼" pressure screw, fixed
¼" pressure screw, fixed

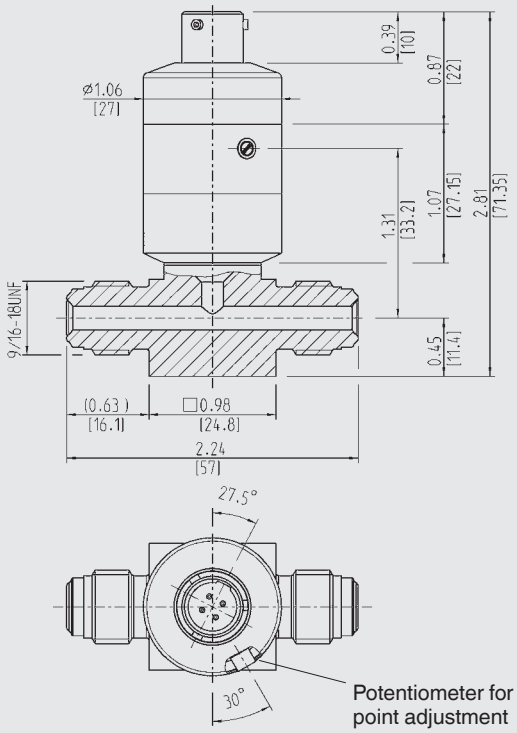

Potentiometer for zero point adjustment

Weight: approx. 0.1 kg
Dead volume: < 1 cm³

Process connections

¼" union nut, rotatable
¼" union nut, rotatable

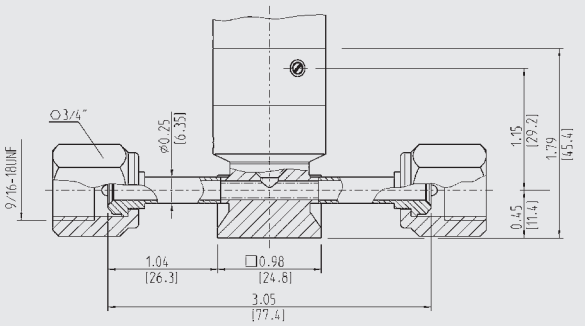

¼" pressure screw, rotatable
¼" pressure screw, rotatable

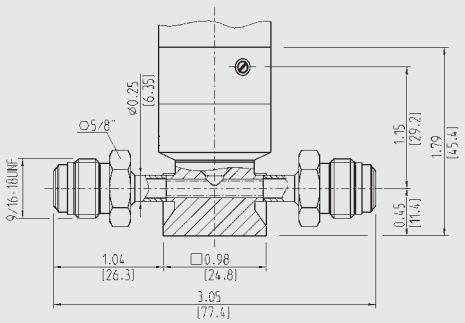

¼" pressure screw, fixed
¼" weld stub

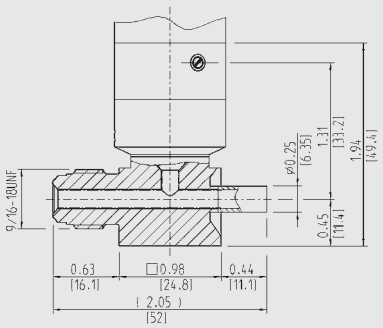

¼" union nut, rotatable
¼" pressure screw, rotatable

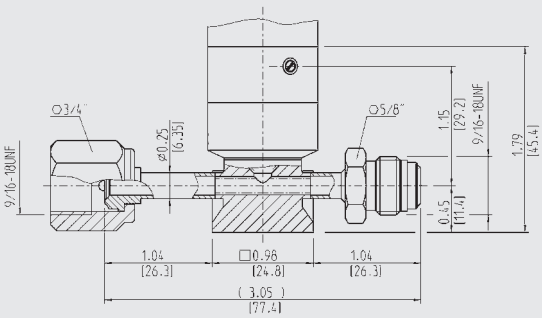

¼" pressure screw, fixed
¼" union nut, rotatable

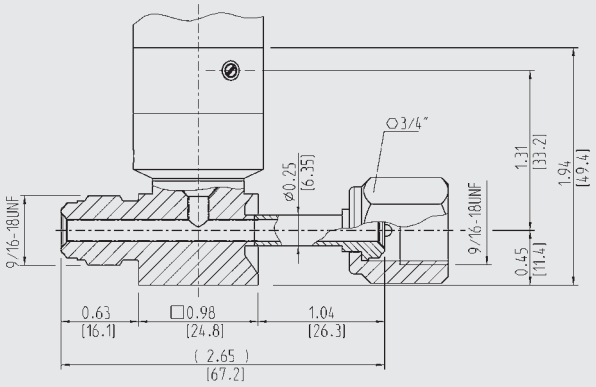

¼" pressure screw, fixed
¼" pressure screw, rotatable

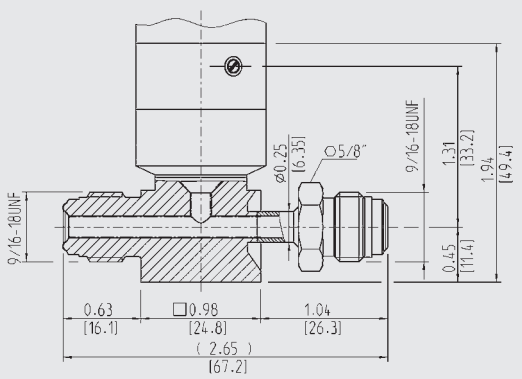

¼" weld stub
¼" weld stub

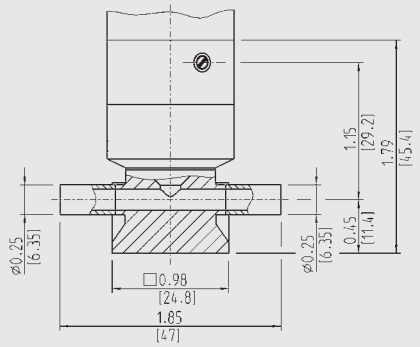

Dimensions in inch [mm], model WU-26

Process connections

MSM C 1 1/8"

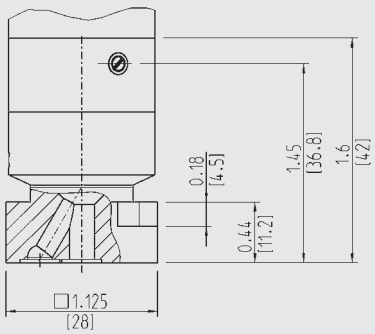

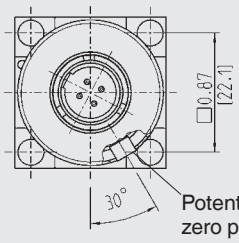

Potentiometer for
zero point adjustment

Weight: approx. 0.1 kg
Dead volume: < 1 cm^3

Ordering information

Model / Measuring range / Process connection / Output signal / Supply voltage / Electrical connection / Cable length / Approval

© 03/2010 WIKA Alexander Wiegand SE & Co. KG, all rights reserved.
The specifications given in this document represent the state of engineering at the time of publishing.
We reserve the right to make modifications to the specifications and materials.

ICS Schneider Messtechnik GmbH
Briesestrasse 59
D-16562 Hohen Neuendorf / OT Bergfelde
Tel.: +49 3303 5040-66
Fax: +49 3303 5040-68
E-Mail: info@ics-schneider.de

WIKA Alexander Wiegand SE & Co. KG
Alexander-Wiegand-Straße 30
63911 Klingenberg/Germany
Tel. +49 9372 132-0
Fax +49 9372 132-406
info@wika.de
www.wika.de