SCHNEIDER MESSTECHNIK

Druck

DPS5000 Series

CAN bus Pressure Transducer

Instruction Manual

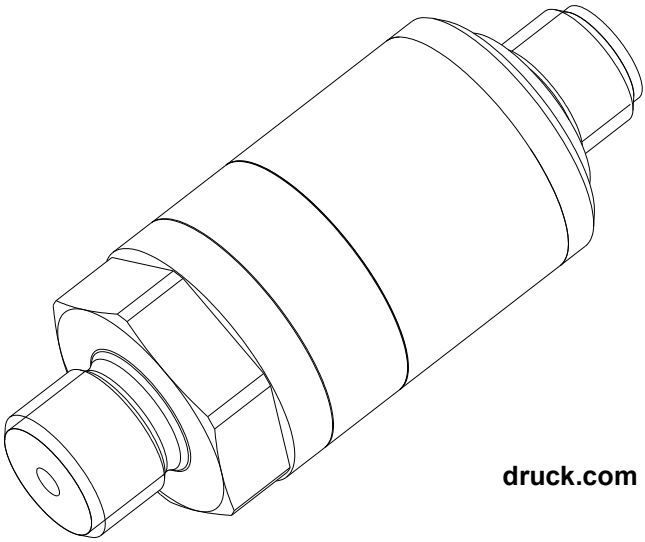

druck.com

ICS Schneider Messtechnik GmbH
Briesestraße 59
D-16562 Hohen Neuendorf / OT Bergfelde

Tel.: 03303 / 50 40 66
Fax.: 03303 / 50 40 68

info@ics-schneider.de
www.ics-schneider.de

Safety

WARNING Do not use with media that has an oxygen concentration > 21 % or other strong oxidizing agents.

This product contains materials or fluids that may degrade or combust in the presence of strong oxidizing agents.

Do not apply pressure greater than the maximum safe working pressure to the sensor.

High pressures and temperatures are dangerous (refer to sales data sheet or customer specified drawing). De-pressurize and allow to cool components in a system that has high operating pressures and temperatures.

Do not interchange transducers between an oil system and a system that uses fuel or gas. This can cause an explosion that can cause death or injury, and/or damage to equipment.

The manufacturer has designed this sensor to be safe when operated using the procedures detailed in this manual. Do not use this sensor for any other purpose than that stated.

This publication contains operating and safety instructions that must be followed for safe operation and to maintain the sensor in a safe condition. The safety instructions are either warnings or cautions issued to protect the user and the equipment from injury or damage.

Use qualified[1] personnel and good engineering practice for all procedures in this publication.

Maintenance

The sensor must be maintained using the manufacturer's procedures and these should be carried out by authorized service agents or the manufacturer's service departments.

https://druck.com/service

Technical Advice

For technical advice contact the manufacturer.

1. A qualified technician must have the necessary technical knowledge, documentation, special test equipment and tools to carry out the required work on this equipment.

Copyright 2018 by Druck Limited.

Symbols

Symbol	Description
CE	This equipment meets the requirements of all relevant European safety directives. The equipment carries the CE mark.
UK CA	This equipment meets the requirements of all relevant UK Statutory Instruments. The equipment carries the UKCA mark.
⚠	This symbol, on the equipment, indicates a warning and that the user should refer to the user manual.
	Druck is an active participant in the UK and EU Waste Electrical and Electronic Equipment (WEEE) take-back initiative (UK SI 2013/3113, EU directive 2012/19/EU). The equipment that you bought has required the extraction and use of natural resources for its production. It may contain hazardous substances that could impact health and the environment. In order to avoid the dissemination of those substances in our environment and to diminish the pressure on the natural resources, we encourage you to use the appropriate take-back systems. Those systems will reuse or recycle most of the materials of your end life equipment in a sound way. The crossed-out wheeled bin symbol invites you to use those systems. If you need more information on the collection, reuse, and recycling systems, please contact your local or regional waste administration. Please visit the link below for take-back instructions and more information about this initiative. **https://druck.com/weee**

Abbreviations

The abbreviations in this publication are as follows:

Abbreviation	Description
ASCII	American Standard Code for Information Interchange
°C	Celsius (Degrees)
CAN	Controller Area Network
CANopen	A set of standards that defines the operation of devices across a CAN system.
CiA	CAN in Automation international users and manufacturers group (CiA e.V.)
COB	Communication Object (CAN Message): Data is sent across a CAN Network inside a COB.
COB-ID	COB-Identifier. Identifies a COB uniquely in a Network and determines the priority of the COB.

Copyright 2018 by Druck Limited.

Abbreviation	Description
DC	Direct Current
°F	Fahrenheit (Degrees)
FP	Floating Point
FV	Field Value
Hz	Hertz
ID	Identifier
kbit/s	Kilobits per second
kg	Kilogram
LSS	Layer Setting Services
Max	Maximum
mbar	Millibar
Mbit/s	Megabits per second
Min	Minimum
mm	Millimetre
NMT	Network Management: One of the service elements of the CAN Application Layer
PDO	Process Data Object
PIN	Personal Identification Number
psi	Pound-force per square inch
PV	Process Value
SDO	Service Data Object
SI	Système International
V dc	Volts Direct Current

Copyright 2018 by Druck Limited.

Copyright 2018 by Druck Limited.

Contents

1. Introduction 1
   1.1 Applications 1
   1.2 Summary of Facilities 1
   1.3 Summary of the CANopen Set of Functions 2

2. Installation 2
   2.1 Example CAN bus System 2
   2.2 Installation – Before Starting 3
   2.3 Installation – Procedures 3
      2.3.1 Pressure Connections 3
      2.3.2 Electrical Connections 3
      2.3.3 Completing the Installation 3

3. Operation 3
   3.1 Start Operating 3
   3.2 Procedures 4
   3.3 Quick Start 4
   3.4 Primary Objects 4
   3.5 To Change the Operation - Node ID and Baud Rate 4
   3.6 To Change the Operation - Objects: 0x1000 - 0x1FFFF 5
      3.6.1 0x100C to 0x100E - Error Control: Node Guarding Option 5
      3.6.2 0x1017 – Error Control: Heartbeat Option 5
      3.6.3 0x1010 01 – To Save Changes to the Data Dictionary 5
      3.6.4 0x1011 01 – To Re-apply the Factory Values 5
      3.6.5 0x1800 02 – The PDO Transmission (Type or Period) 5
      3.6.6 0x1A00 – The Data in the 'Transmit PDO' 5
      3.6.7 0x1F80 - NMT Start-up 6
   3.7 To Change the Operation – Objects: 0x2000 – 0x2FFFF 6
      3.7.1 0x210C– Node ID 6
      3.7.2 0x210D – Bit Rate 6
      3.7.3 0x2200 – To Change the Calibration Data 6
      3.7.4 0x2201 to 0x2203 – The Last Calibration Year, Month, Day 6
      3.7.5 0x2204 to 0x2206 – The Next Calibration Year, Month, Day 6
      3.7.6 0x2207 – The Pressure Calibration Gain 7
      3.7.7 0x2208 – The Pressure Calibration Offset 7
      3.7.8 0x2209 – The Temperature Calibration Gain 7
      3.7.9 0x220A – The Temperature Calibration Offset 7
      3.7.10 0x220D to 0x2218 – The Filter System 7
      3.7.11 0x2304 – The Tag for the Type of Data 8
   3.8 To Change the Operation – Objects: 0x6000 – 0x6FFFF 8
      3.8.1 0x6120 to 0x6124 – The Scale Data for Pressure and Temperature Output 8
      3.8.2 0x6131 01 – The Units for the Pressure Output 8
      3.8.3 0x6148 – The Local Limits (Minimum Pressure and Temperature) 9
      3.8.4 0x6149 – The Local Limits (Maximum Pressure and Temperature) 9
   3.9 To Monitor the Operation – Objects: 0x1000 – 0x1FFFF 9
      3.9.1 0x1001 – The Status of the Unit 9
   3.10 To Monitor the Operation – Objects: 0x2000 – 0x2FFFF 9
      3.10.1 0x2006 – The Count: Pressure is More than the Limit 9

Copyright 2018 by Druck Limited.

3.10.2 0x2007 – The Count: Pressure is Less than the Limit 9
3.10.3 0x2008 – The Count: Temperature is More than the Limit 10
3.10.4 0x2009 – The Count: Temperature is Less than the Limit 10
3.11 To Monitor the Operation – Objects: 0x6000 – 0x6FFFF 10
3.11.1 0x6130 01/0x6130 02 – The Pressure and Temperature 10
3.11.2 0x6150 – The Pressure and Temperature Status 10

4. Maintenance 11
4.1 Maintenance Tasks 11
4.2 Maintenance – From the Software 11
4.2.1 The Status of the Unit 11
4.3 Maintenance – Cleaning 11
4.4 Maintenance – Calibration 12
4.4.1 Calibration – Equipment 12
4.4.2 Two-Point Pressure Calibration – Procedure 12
4.4.3 Two-Point Pressure Calibration – Results 13
4.5 Approved Service Agents 13

Appendix A. CANopen Object Dictionary 15

Appendix B. CANopen Value 23
B.1 Communication Segment 23
B.1.1 Object 1000h: Device Type 23
B.1.2 Object 1001h: Error Register 23
B.1.3 Object 1003h: Pre-defined Error Field 23
B.1.4 Object 1005h: COB-ID SYNC 23
B.1.5 Object 1007h: Synchronous Window Length 23
B.1.6 Object 1008h: Manufacturer Device Name 23
B.1.7 Object 100Ch: Guard Time 23
B.1.8 Object 100Dh: Life Time Factor 24
B.1.9 Object 1010h: Store Parameter Field 24
B.1.10 Object 1011h: Restore Default Parameters 24
B.1.11 Object 1012h: COB-ID Time Stamp 24
B.1.12 Object 1014h: COB-ID EMCY 24
B.1.13 Object 1015h: Inhibit Time Emergency 24
B.1.14 Object 1017h: Producer Heartbeat Time 24
B.1.15 Object 1018h: Identity Object 24
B.1.16 Object 1019h: Synchronous Counter Overflow Value 25
B.1.17 Object 1800h to 1803h: Transmit PDO Communication Parameter 1 25
B.1.18 Object 1A00h to 1A03h: Transmit PDO Mapping Parameter 1 25
B.1.19 Object 1F80h: NMT Start-up 25
B.2 Manufacturer Segment 25
B.2.1 Object 2003h: Current Time 25
B.2.2 Object 2004h: Acquisition Time 25
B.2.3 Object 2005h: Acquisition Interval 26
B.2.4 Object 2006h: Pressure Span Overflow Count 26
B.2.5 Object 2007h: Pressure Span Underflow Count 26
B.2.6 Object 2008h: Temperature Span Overflow Count 26
B.2.7 Object 2009h: Temperature Span Underflow Count 26
B.2.8 Object 210Ch: Node ID 26
B.2.9 Object 210Dh: Bit Rate 26
B.2.10 Object 2200h: Calibration Access Pin 26

Copyright 2018 by Druck Limited.

B.2.11 Object 2201h: Last Calibration Year 26
B.2.12 Object 2202h: Last Calibration Month 26
B.2.13 Object 2203h: Last Calibration Day 26
B.2.14 Object 2204h: Next Calibration Year 26
B.2.15 Object 2205h: Next Calibration Month 26
B.2.16 Object 2206h: Next Calibration Day 26
B.2.17 Object 2207h: Pressure Gain 26
B.2.18 Object 2208h: Pressure Offset 26
B.2.19 Object 2209h: Temperature Gain 26
B.2.20 Object 220Ah: Temperature Offset 26
B.2.21 Object 2300h: PDCR Min Pressure 27
B.2.22 Object 2301h: PDCR Max Pressure 27
B.2.23 Object 2302h: PDCR Type 27
B.3 Device Profile Segment 27
B.3.1 Object 6100h: AI Input FV 27
B.3.2 Object 6110h: AI Sensor Type 27
B.3.3 Object 6120h: AI Input Scaling 1 FV 27
B.3.4 Object 6121h: AI Input Scaling 1 PV 27
B.3.5 Object 6122h: AI Input Scaling 2 FV 27
B.3.6 Object 6123h: AI Input Scaling 2 PV 27
B.3.7 Object 6124h: AI Input Offset 27
B.3.8 Object 6130h: AI Input PV 27
B.3.9 Object 6131h: AI Physical Unit PV 28
B.3.10 Object 6148h: AI Span Start 28
B.3.11 Object 6149h: AI Span End 28
B.3.12 Object 6150h: AI Status 28

Appendix C. Alternative Pressure Units 29

Appendix D. Bibliography 31

Copyright 2018 by Druck Limited.

Copyright 2018 by Druck Limited.

1. Introduction

The DPS5000 series measures absolute pressure or gauge to produce fast, accurate pressure data through a Controller Area Network (CAN) bus interface.

Note: The prerequisites for this instruction manual are prior knowledge of the CANopen protocols and standards. See Appendix D, “Bibliography,” on page 31 for more details.

1.1 Applications

The DPS5000 series is for automated systems using a CAN bus network and CANopen software standards. The pressure transducers in the DPS5000 series are ideal for automated systems with:

- A large amount of digital pressure data.
- A high level of accuracy over a wide temperature range.
- A sophisticated level of software control.

1.2 Summary of Facilities

Because all the transducers in the DPS5000 series use CANopen software standards, each transducer includes a CANopen Object Dictionary. Use the CANopen Object Dictionary to do these primary tasks:

- Monitor the current pressure and temperature data.
- Tag the type of data. For example: Oil-mbar, H2O-mbar.
- Read the factory defined operating data. For example, the pressure range, and the type of sensor.
- Set the update frequency for the pressure and temperature data.
- Set the pressure units.
- Monitor the current status.
- Read and set the last and next calibration date.
- Set new calibration values.
- Set local pressure and temperature limits for use with the internal out-of-limit counters.
- Monitor the number of times the pressure is not in the specified limits.
- Monitor the number of times the temperature is not in the specified limits.
- Restore all the factory default values for the CANopen Object Dictionary.

Use a standard CANopen software package to access the contents of the CANopen Object Dictionary.

Copyright 2018 by Druck Limited.

1.3 Summary of the CANopen Set of Functions

Function	Comment
NMT	Slave
Error Control	Node Guarding or Heartbeat.
Node ID	LSS (DSP-305 V1.0)
Number of PDO	4 transmit PDOs, no receive PDOs.
PDO Modes	Event triggered or Remotely requested.
PDO Linking	Yes
PDO Mapping	Default
Emergency Message	Yes
CANopen Version	DS-301 V4.01
Framework	No
Certified	No
Device Profile	DSP-404 V1.0
Maximum Baud Rate	1 Mbit/s

2. Installation

This section details installation of the pressure transducer, when complete the pressure transducer can be prepared for operation (refer to Chapter 3, “Operation,” on page 3).

2.1 Example CAN bus System

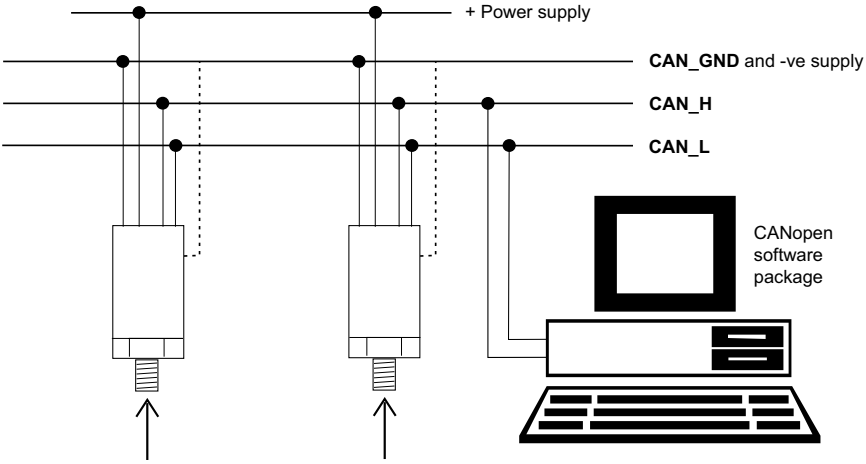

CAN_X Identifies the signal line connections on the CAN bus.
Cable screen to CAN_GND or an applicable earth.
Represents the different pressure conditions in the example system.

Figure 1: An Example CAN bus System

This shows the pressure transducers in an example CAN bus system and must have these items:

Copyright 2018 by Druck Limited.

- A CAN bus with an applicable input/output device for the signal lines (applicable to the electrical connection on the pressure transducer).
- Power supply: 5 V dc to 30 V dc.
- All applicable tools to connect the pressure and electrical connections, as detailed in the applicable system installation manual.

2.2 Installation – Before Starting

Make sure to use the correct pressure transducer (refer to Chapter 1, “Introduction,” on page 1).

Read all relevant instructions and procedures in the applicable system installation manual.

Read the following installation procedures before installing the pressure transducer.

2.3 Installation – Procedures

WARNING Do not interchange transducers between an oil system and a system that uses fuel or gas. This can cause an explosion that can cause death or injury, and/or damage to equipment.

High pressures and temperatures are dangerous (refer to sales data sheet or customer specified drawing). De-pressurize and allow to cool components in a system that has high operating pressures and temperatures.

Note: Until installation, keep the unit in the original container with all the covers in position. The container and covers prevent contamination and damage. When not in use, keep the connections clean at all times, and put the covers on the open connections.

2.3.1 Pressure Connections

Connect the pressure transducer connection to the pressure system and torque tighten the connection (refer to System Installation Manual).

2.3.2 Electrical Connections

Refer to the sales data sheet or customer specified drawing.

2.3.3 Completing the Installation

Do all the applicable tests and checks (refer to System Installation Manual).

After completing installation, the pressure transducer is ready for use.

3. Operation

This section includes:

- The procedures to start and change the operation of the pressure transducer.
- The available data from the pressure transducer.

Note: 0x identifies a hexadecimal value. Object 0x1800 02 = Index 0x1800, Sub-index 0x02 (refer to Appendix B, “CANopen Value,” on page 23).

3.1 Start Operating

After a successful installation (refer to Chapter 1, “Introduction,” on page 1) and to start operating requires:

- A CANopen software package to access the CANopen Object Dictionary.
- Operation of the CANopen network, including the Network Initialization Process (the Boot-up process) and/or the applicable configuration procedures.

Copyright 2018 by Druck Limited.

3.2 Procedures

1. Complete the boot-up procedure (defined in the CANopen standard) for the CAN bus network. After boot-up the pressure transducer enters a “pre-operational” mode and in this mode responds to SDO and LSS messages.
2. The pressure transducer must be set to its operational state to respond to sync messages and to be fully operational.

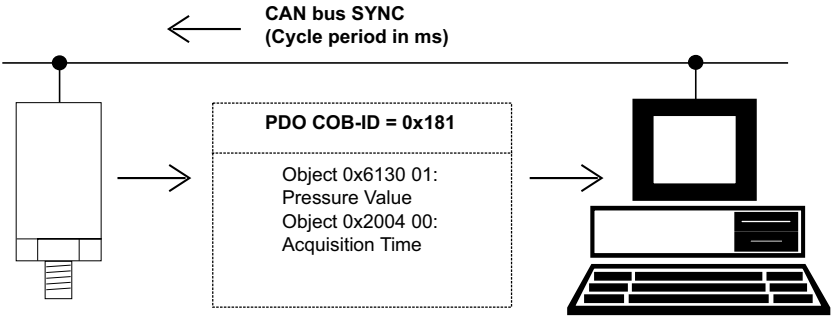

Figure 2: Default ‘Transmit PDO’ Operation

Note: This shows how the pressure transducer uses the default values to transmit a Process Data Object (PDO).

The readings can be filtered by a range of preset finite impulse response (FIR) filters. (refer to “0x220D to 0x2218 – The Filter System” on page 7).

Use the CANopen software package to receive the PDO and get access to the CANopen Object Dictionary.

Use the CANopen software package to change these values:

- Values set with the Layer Setting Services (LSS).
- Values in the CANopen Object Dictionary.

3.3 Quick Start

Get the current pressure and temperature values by using object 0x6130:

- Sub-item 01 returns the pressure value in the default pressure units.
- Sub-item 02 returns the temperature in degrees Celsius.

3.4 Primary Objects

The following procedures identify the primary objects that can be changed and monitored. Refer to Appendix B, “CANopen Value,” on page 23 for a complete list.

3.5 To Change the Operation - Node ID and Baud Rate

Use the CANopen Layer Setting Services (LSS) to change these primary objects in the pressure transducer:

Note: To respond to LSS messages the pressure transducer must be in pre-operational mode.

- The node ID (default value = 2).
- The baud rate (default value = 250 kbits/s).

In addition, object 0x210C can be used to modify the node ID. Object 0x210D holds the baud rate.

To make changes to these and other data dictionary objects permanent, save them and cycle the power to the sensor.

Copyright 2018 by Druck Limited.

When using the LSS, the device must be identified. Object 0x1018 (identity) contains the identification data. Refer to Appendix D, “Bibliography,” on page 31.

3.6 To Change the Operation - Objects: 0x1000 - 0x1FFFF

3.6.1 0x100C to 0x100E - Error Control: Node Guarding Option

To use Node Guarding for error control, set applicable values for these objects:

- 0x100C (Guard Time).
- 0x100D (Life Time Factor).

Refer to Appendix D, “Bibliography,” on page 31.

3.6.2 0x1017 – Error Control: Heartbeat Option

To use Heartbeat for error control, set applicable value for this object:

- 0x1017 (Heartbeat Time).

Refer to Appendix D, “Bibliography,” on page 31.

3.6.3 0x1010 01 – To Save Changes to the Data Dictionary

Use object 0x1010 01 (Store Parameter Field) to save the data dictionary to non-volatile storage.

Example:

Set the value to 0x65766173 = evas (in ASCII)

Note: This does not overwrite the factory data and the sensor can be returned to its factory state by using 0x1011 as described below.

3.6.4 0x1011 01 – To Re-apply the Factory Values

Use object 0x1011 01 (Restore Default Parameters) to re-apply all the factory values.

Example:

Set the value to 0x64616F6C = daol (in ASCII)

Having re-applied the factory values, the sensor should be power cycled for the values to be applied.

3.6.5 0x1800 02 – The PDO Transmission (Type or Period)

Use object 0x1800 02 (Transmission Type) to change the type of PDO transmission or the period between each PDO transmission (refer to Appendix D, “Bibliography,” on page 31).

3.6.6 0x1A00 – The Data in the ‘Transmit PDO’

Use object 0x1A00 (Transmit PDO Mapping) to change the data sent in the ‘Transmit PDO’ (maximum size = 8 bytes).

To change the transmit PDO, set bit 31 of 0x1800 01 “COB-ID” to 1 and set 0x1A00 01 to 0.

After changing the PDO the process should be reversed.

Example:

To monitor the current status of the pressure value, set Sub-index 0x02 to 0x61500108 = Object 0x6150 01, 1 byte of data.

Status	Description
0	The value is in the limits of 0x6148 and 0x6149.
1	The value is more than the limit of 0x6149.
2	The value is less than the limit of 0x6148.

Copyright 2018 by Druck Limited.

3.6.7 0x1F80 - NMT Start-up

Use object 0x1F80 to set the start-up mode of the sensor, see Appendix B.1.19.

3.7 To Change the Operation – Objects: 0x2000 – 0x2FFFF

3.7.1 0x210C– Node ID

Valid node ID can be in the range 0x01 to 0x7F. Changes to this value do not take effect unless saved and the power cycled.

3.7.2 0x210D – Bit Rate

The bit rate at which the sensors communicate can be one of the following values:

Value	Baud Rate
10	10 kbit/s
20	20 kbit/s
50	50 kbit/s
125	125 kbit/s
250	250 kbit/s
500	500 kbit/s
800	800 kbit/s
1000	1000 kbit/s

Changes to the bit rate value does not take effect unless saved and the power cycled.

3.7.3 0x2200 – To Change the Calibration Data

To write new calibration values in objects 0x2201 to 0x220A, set object 0x2200 (Calibration Access Pin) to 4118.

To prevent accidental changes to the calibration data, set the value to 0 after completing all the changes.

3.7.4 0x2201 to 0x2203 – The Last Calibration Year, Month, Day

Refer to “0x2200 – To Change the Calibration Data” on page 6. The initial values identify the date of the factory calibration. After each calibration, set a new date (refer to Chapter 4, “Maintenance,” on page 11).

3.7.5 0x2204 to 0x2206 – The Next Calibration Year, Month, Day

Refer to “0x2200 – To Change the Calibration Data” on page 6. The initial values identify the date of the factory calibration + one year. After each calibration, set a new date (refer to Chapter 4, “Maintenance,” on page 11).

Copyright 2018 by Druck Limited.

3.7.6 0x2207 – The Pressure Calibration Gain

Refer to “0x2200 – To Change the Calibration Data” on page 6. Use 0x2207 (Pressure Gain) to apply a correction to the compensated source pressure (refer to Chapter 4, “Maintenance,” on page 11).

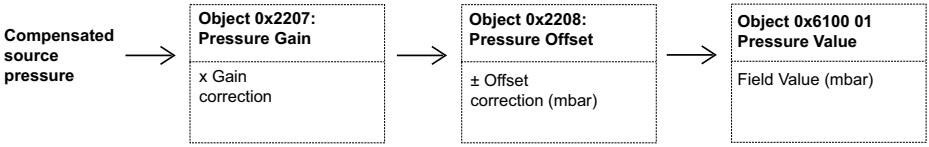

Figure 3: Pressure Calibration Gain

3.7.7 0x2208 – The Pressure Calibration Offset

Refer to “0x2200 – To Change the Calibration Data” on page 6. Use 0x2208 (Pressure Offset) to apply a correction to the compensated source pressure (refer to Chapter 4, “Maintenance,” on page 11).

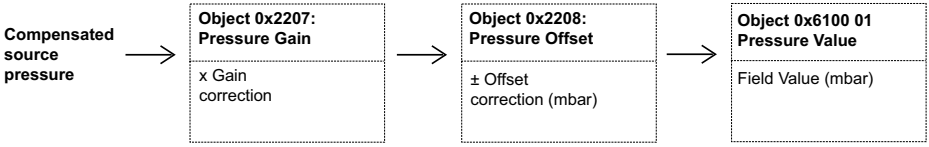

Figure 4: Pressure Calibration Offset

3.7.8 0x2209 – The Temperature Calibration Gain

Refer to “0x2200 – To Change the Calibration Data” on page 6. Use 0x2209 (Temperature Gain) to apply a correction to the compensated source temperature.

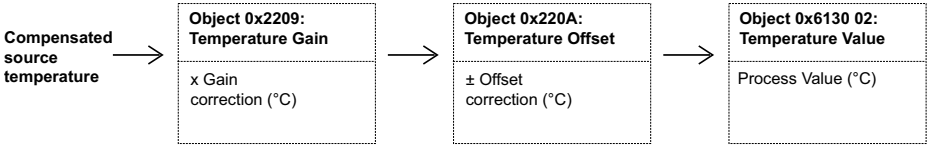

Figure 5: Temperature Calibration Gain

3.7.9 0x220A – The Temperature Calibration Offset

Refer to “0x2200 – To Change the Calibration Data” on page 6. Use 0x220A (Temperature Offset) to apply a correction to the compensated source temperature.

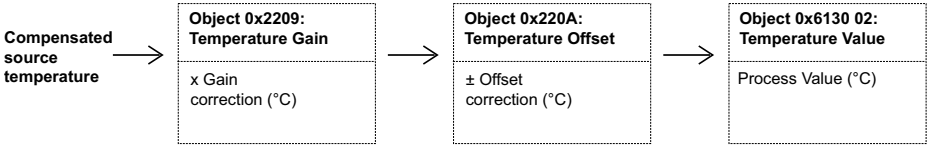

Figure 6: Temperature Calibration Offset

3.7.10 0x220D to 0x2218 – The Filter System

The DPS5000 sensor can support a wide range of sample rates and filters to give a choice of speed and accuracy. The filter system comprises of a pre-scaler and a FIR filter. The FIR filter has between 1 and 51 taps. There are five pre-set filter configurations. It is beyond the scope of this manual to describe the filter parameters.

Copyright 2018 by Druck Limited.

Changing the value at 0x2217 selects a pre-set filter configuration. The pre-scaler, FIR filter coefficients and FIR filter number of taps for each pre-set filter configuration is shown below.

Name	Filter Number	Cut-off Frequency	Order	Number of Taps	Pre-scaler	Update Rate
No filter	0	1400 Hz	-	1	1	1 kHz
Basic	1	20 Hz	3rd	31	10	100 Hz
Default	2[a]	200 Hz	3rd	21	1	1 kHz
Low noise	3	2 Hz	5th	51	100	10 Hz
General purpose	4	125 Hz	4th	31	1	1 kHz
Fast response	5	500 Hz	2nd	5	1	1 kHz

a. Factory set default filter setting.

3.7.11 0x2304 – The Tag for the Type of Data

Use object 0x2304 (Tag) to identify the type of data that the pressure transducer supplies (maximum: 10 characters). For example: Oil-mbar.

3.8 To Change the Operation – Objects: 0x6000 – 0x6FFFF

3.8.1 0x6120 to 0x6124 – The Scale Data for Pressure and Temperature Output

The pressure transducer uses a two-point calibration to calculate the pressure output. The two-point calibration includes the relation between the Field Value (FV) units and the Process Value (PV) units. To change the relation between FV and PV, use the scale-factor objects and the zero offset. This allows the reading of the pressure output in one of the alternative pressure units.

Example:

Set object 0x6123 01 to 100 (the scale-factor for pascal).

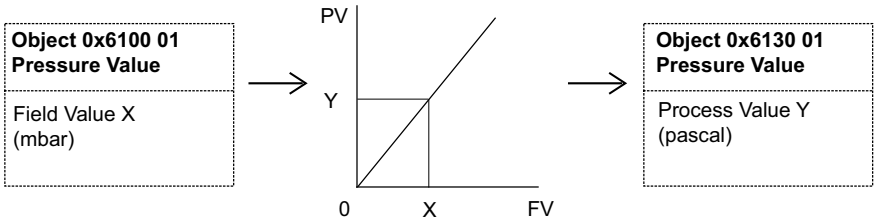

Figure 7: Scale of Pressure and Temperature Output

For a list of values of the alternative pressure units, refer to Appendix C, “Alternative Pressure Units,” on page 29.

To change the scale data for temperature use the information above but with sub-index 02 replacing 01.

3.8.2 0x6131 01 – The Units for the Pressure Output

Use object 0x6131 01 (Pressure Value) to change the units for the pressure output.

Example:

Set Sub-index 0x01 to 0x00220000 = CANopen value for pascal.

For a list of values of the alternative pressure units, refer to Appendix C, “Alternative Pressure Units,” on page 29.

Copyright 2018 by Druck Limited.

3.8.3 0x6148 – The Local Limits (Minimum Pressure and Temperature)

Use object 0x6148 (Span Start – FP) to set the local limits for the pressure transducer operation. Set the applicable minimum values for the pressure and temperature (refer to “0x2007 – The Count: Pressure is Less than the Limit” on page 9 and “0x2009 – The Count: Temperature is Less than the Limit” on page 10).

3.8.4 0x6149 – The Local Limits (Maximum Pressure and Temperature)

Use object 0x6149 (Span End – FP) to set the local limits for the pressure transducer operation. Set the applicable maximum values for the pressure and temperature (refer to “0x2006 – The Count: Pressure is More than the Limit” on page 9 and “0x2008 – The Count: Temperature is More than the Limit” on page 10).

- Sub-index 01 sets the pressure.
- Sub-index 02 sets the temperature limit.

3.9 To Monitor the Operation – Objects: 0x1000 – 0x1FFFF

3.9.1 0x1001 – The Status of the Unit

Use object 0x1001 (Error Register) to monitor the current status of the unit. Also see “0x6150 – The Pressure and Temperature Status” on page 10.

3.10 To Monitor the Operation – Objects: 0x2000 – 0x2FFFF

3.10.1 0x2006 – The Count: Pressure is More than the Limit

Use object 0x2006 (Pressure Span Overflow Count) to monitor the pressure history. The count increments one each time the process value is more than the span end value.

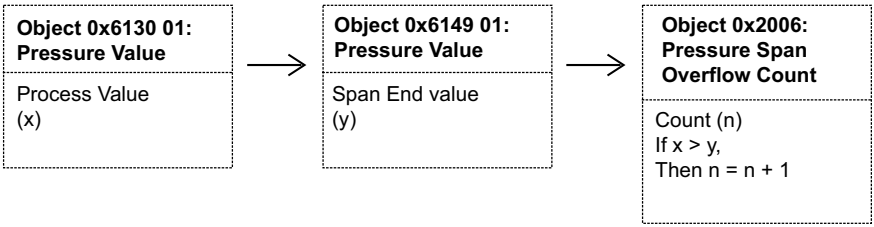

Figure 8: Pressure Span Overflow Count

Reset the count when applicable. For example, after calibration.

3.10.2 0x2007 – The Count: Pressure is Less than the Limit

Use object 0x2007 (Pressure Span Underflow Count) to monitor the pressure history. The count increments one each time the process value is less than the span start value.

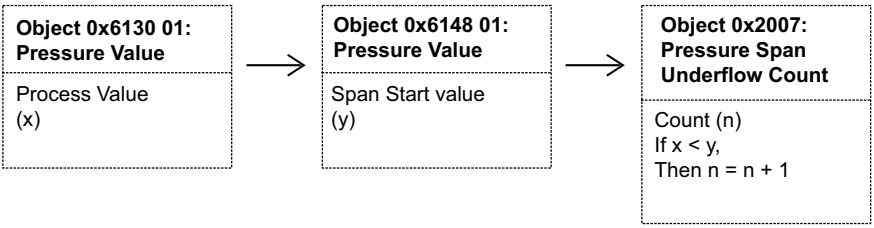

Figure 9: Pressure Span Underflow Count

Reset the count when applicable. For example, after calibration.

Copyright 2018 by Druck Limited.

3.10.3 0x2008 – The Count: Temperature is More than the Limit

Use object 0x2008 (Temperature Span Overflow Count) to monitor the temperature history. The count increments one each time the process value is more than the span end value.

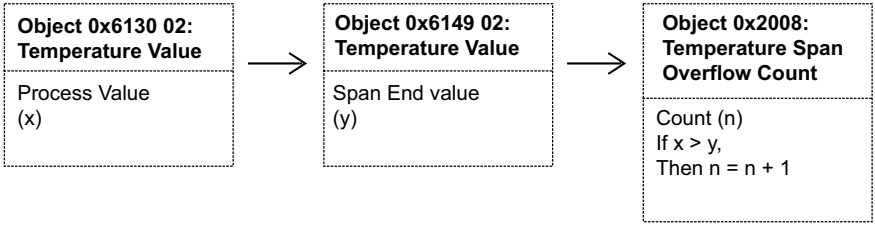

Figure 10: Temperature Span Overflow Count

Reset the count when applicable. For example, after calibration.

3.10.4 0x2009 – The Count: Temperature is Less than the Limit

Use object 0x2009 (Temperature Span Underflow Count) to monitor the temperature history. The count increments one each time the process value is more than the span end value.

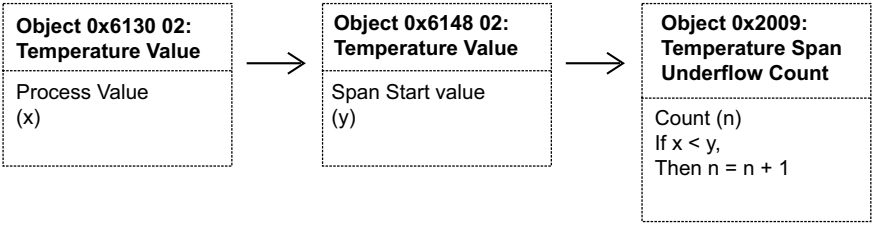

Figure 11: Temperature Span Underflow Count

Reset the count when applicable. For example, after calibration.

3.11 To Monitor the Operation – Objects: 0x6000 – 0x6FFFF

3.11.1 0x6130 01/0x6130 02 – The Pressure and Temperature

Use object 0x6130 01 (Pressure Value) and object 0x6130 02 (Temperature Value) to monitor the current process values. The process values include the calibration corrections (objects 0x2207 to 0x220A), and the applicable scale-factor (object 0x6123 01).

Use object 0x1A00 (Transmit PDO Mapping) to put the applicable data in the ‘Transmit PDO’.

3.11.2 0x6150 – The Pressure and Temperature Status

Use object 0x6150 (Status) to monitor the current status of the pressure and temperature output.

The individual bits of the status byte are used as follows:

- Data is not valid.
- Value more than the limit.
- Value less than the limit.

Copyright 2018 by Druck Limited.

The status of the pressure is linked to the temperature. If the temperature is out of range, bit 0 of the pressure status will be set.

Status	Description
0	The value is in the limits of 0x6148 and 0x6149.
1	The value is more than the limit of 0x6149.
2	The value is less than the limit of 0x6148.

4. Maintenance

WARNING High pressures and temperatures are dangerous and can cause injury (Refer to pressure limits in the sales data sheet). Be careful when working on components connected to lines that have high pressures and heat. Use the applicable protection and obey all safety precautions.

Note: Until installation, keep the unit in the original container with all the covers in position. The container and covers prevent contamination and damage. When not in use, keep the connections clean at all times, and put the covers on the open connections.

4.1 Maintenance Tasks

- Identify faults from the software.
- Clean the unit.
- Recalibrate the unit.

Note: Druck can provide a calibration service that is traceable to international standards.

Return the unit to the supplier for these items:

- For all repairs.
- For changes or upgrades to the internal software.

4.2 Maintenance – From the Software

Note: 0x identifies a hexadecimal value. Object 0x1800 02 = Index 0x1800, Sub-index 0x02 (refer to Appendix B, “CANopen Value,” on page 23).

4.2.1 The Status of the Unit

To monitor the current status of the unit, use these sources of error data:

- The Error Register (object 0x1001) (refer to Appendix B, “CANopen Value,” on page 23).

If there is an error:

- Do the Network Initialization Process (the boot-up process) again.
- Examine the electrical connections. Do all the applicable tests and checks (refer to the System Installation Manual).
- If necessary, install a new pressure transducer.

4.3 Maintenance – Cleaning

CAUTION Do not use high-pressure gas to remove dirt from the unit. This can damage the sensor in the unit.

1. If necessary, remove the unit.
2. Clean the unit with a lint-free cloth and a soft brush. If necessary, make the cloth moist with a weak solution of detergent.

Copyright 2018 by Druck Limited.

3. Allow the unit to dry before use.

4.4 Maintenance – Calibration

Druck supplies a calibration certificate with the pressure transducer. When it is necessary to recalibrate the pressure transducer, use the procedure that appears below (Druck recommends a minimum interval of once a year).

Note: Druck can provide a calibration service that is traceable to international standards.

4.4.1 Calibration – Equipment

Druck recommends the use of these items of equipment to calibrate the unit:

- Pressure source - minimum accuracy: 0.01% of reading
- Digital thermometer - minimum accuracy: 1 °C
- A CANopen software package to get access to the contents of the CANopen Object Dictionary (refer to Appendix B, “CANopen Value,” on page 23).

4.4.2 Two-Point Pressure Calibration – Procedure

Note: 0x identifies a hexadecimal value. Object 0x1800 02 = Index 0x1800, Sub-index 0x02 (refer to Appendix B, “CANopen Value,” on page 23).

To get accurate results, calibrate in conditions where the pressure and temperature are stable.

1. Record the current values for the calibration data:
   - Object 0x2207 00 (Pressure Gain) = GAIN

     Default value = 1
   - Object 0x2208 00 (Pressure Offset) = OFFSET

     Default value = 0 mbar
2. First calibration point:
   a. Apply Pressure (APL) at 10% of the full-scale pressure (in mbar) and allow the pressure to become stable.
   b. Record the Field Value (FV1L) that appears in object 0x6100 01 (Pressure Value). Record the value in mbar.
3. Second calibration point:
   a. Apply Pressure (APH) at 90% of the full-scale pressure (in mbar) and allow the pressure to become stable.
   b. Record the Field Value (FV1H) that appears in object 0x6100 01 (Pressure Value). Record the value in mbar.
4. Calculate the new values for the calibration data:
   - NEW GAIN = [GAIN] * [(APH - APL) / (FV1H - FV1L)]
   - NEW OFFSET = [(OFFSET) - FV1L] + [(APL) * [(APH - APL) / (FV1H - FV1L)]]

     The value for the NEW OFFSET is in mbar.
5. Write the new values for the calibration data back to the CANopen Object Dictionary:
   a. Set object 0x2200 00 (calibration access pin) to 4118.
   b. Set object 0x2207 00 (pressure gain) to the NEW GAIN value.
   c. Set object 0x2208 00 (pressure offset) to the NEW OFFSET value. The value for the NEW OFFSET is in mbar.
   d. Set object 0x2200 00 (calibration access pin) to 0.
6. Confirm that the new values for the calibration data are correct:
   a. Repeat steps 2 and 3.

Copyright 2018 by Druck Limited.

7. Write the new values for the last and next calibration dates back to the CANopen Object Dictionary:
   a. Set object 0x2200 00 (Calibration Access Pin) to 4118.
   b. Set objects 0x2201 00 to 0x2203 00 to the new values for the last calibration year, month, day.
   c. Set objects 0x2204 00 to 0x2206 00 to the new values for the next calibration year, month, day.
   d. Set object 0x2200 00 (Calibration Access Pin) to 0.
8. If applicable, reset the values for the out-of-limit counters (objects 0x2006 to 0x2009).

4.4.3 Two-Point Pressure Calibration – Results

For correct operation, the value for the NEW GAIN is in the range 0.9 to 1.1. If the value is not in this range, this shows either a defective unit or defective calibration equipment.

4.5 Approved Service Agents

Find the approved service agents at: **https://druck.com/service**

Copyright 2018 by Druck Limited.

Copyright 2018 by Druck Limited.

Appendix A. CANopen Object Dictionary

Index	Name	Object Code	Sub-Index	Description	Data Type	Access	PDO Mapping	Default Value
1000	Device Type (See B.1.1)	Variable			UNSIGNED32	CONST	No	0x00020194
1001	Error Register (See 3.9.1, B.1.2)	Variable			UNSIGNED8	RO	No	0x00
1003	Pre-defined Error Field (See B.1.3)	Array	000	Number of Errors	UNSIGNED8	RW	No	0x00
			001	Standard Error Field	UNSIGNED32	RO	No	0x00000000
1005	COB-ID SYNC (See B.1.4)	Variable			UNSIGNED32	RW	No	0x00000080
1007	Synchronous Window Length (See B.1.5)	Variable			UNSIGNED32	RW	No	0x00000000
1008	Manufacturer Device Name (See B.1.6)	Variable			VISIBLE_STRING	CONST	No	DPS5000 CAN DK465 V00.00
100C	Guard Time (See 3.6.1, B.1.7)	Variable			UNSIGNED16	RW	No	0x0000
100D	Life Time Factor (See 3.6.1, B.1.8)	Variable			UNSIGNED8	RW	No	0x00
1010	Store Parameter Field (See 3.6.3, B.1.9)	Array	000	Number of Entries	UNSIGNED8	RO	No	0x01
			001	Save all Parameters	UNSIGNED32	RW	No	0x00000001
1011	Restore Default Parameters (See 3.6.4, B.1.10)	Array	000	Number of Entries	UNSIGNED8	RO	No	0x01
			001	Restore all Default Parameters	UNSIGNED32	RW	No	0x00000000

Copyright 2018 by Druck Limited.

Index	Name	Object Code	Sub-Index	Description	Data Type	Access	PDO Mapping	Default Value
1012	COB-ID Time Stamp (See B.1.11)	Variable			UNSIGNED32	RO	No	0x00000100
1014	COB-ID EMCY (See B.1.12)	Variable			UNSIGNED32	RW	No	0x00000082
1015	Inhibit Time Emergency (See B.1.13)	Variable			UNSIGNED16	RW	No	0x0000
1017	Producer Heartbeat Time (See 3.6.2, B.1.14)	Variable			UNSIGNED16	RW	No	0x0000
1018	Identity Object (See B.1.15)	Variable	000	Number of Entries	UNSIGNED8	RO	No	0x04
			001	Vendor Id	UNSIGNED32	RO	No	0x00000050
			002	Product Code	UNSIGNED32	RO	No	0x00001388
			003	Revision number	UNSIGNED32	RO	No	0x0000000B
			004	Serial number	UNSIGNED32	RO	No	0x000022B8
1019	Synchronous counter overflow value (See B.1.16)	Variable			UNSIGNED8	RW	No	0x00
1800 to 1803	Transmit PDO Communication Parameter 1 (See 3.6.5, B.1.17)	Record	000	Number of Entries	UNSIGNED8	RO	No	0x05
			001	COB-ID	UNSIGNED32	RW	No	Node ID + 0x00000180
			002	Transmission Type	UNSIGNED8	RW	No	0x01
			003	Inhibit Time	UNSIGNED16	RW	No	0x0000
			004	Compatibility Entry	UNSIGNED8	RW	No	0x00
			005	Event Timer	UNSIGNED16	RW	No	0x0000

Copyright 2018 by Druck Limited.

Index	Name	Object Code	Sub-Index	Description	Data Type	Access	PDO Mapping	Default Value
1A00 to 1A03	Transmit PDO Mapping Parameter 1 (See 3.6.6, B.1.18)	Record	000	Number of Entries	UNSIGNED8	RW	No	0x02
			001	Mapping Entry 1	UNSIGNED32	RW	No	0x61300120
			002	Mapping Entry 2	UNSIGNED32	RW	No	0x20040020
			003	Mapping Entry 3	UNSIGNED32	RW	No	0x00000000
			004	Mapping Entry 4	UNSIGNED32	RW	No	0x00000000
1F80	NMT Startup (See 3.6.7, B.1.19)	Variable			UNSIGNED32	RW	No	0x00000000
2003	Current Time (See B.2.1)	Variable			UNSIGNED48	RO	No	
2004	Acquisition Time (See B.2.2)	Variable			UNSIGNED32	RO	Yes	
2005	Acquisition Interval (See B.2.3)	Variable			UNSIGNED16	RO	No	
2006	Pressure Span Overflow Count (See 3.10.1, B.2.4)	Variable			UNSIGNED16	RW	No	0x0000
2007	Pressure Span Underflow Count (See 3.10.2, B.2.5)	Variable			UNSIGNED16	RW	No	0x0000
2008	Temperature Span Overflow Count (See 3.10.3, B.2.6)	Variable			UNSIGNED16	RW	No	0x0000
2009	Temperature Span Underflow Count (See 3.10.4, B.2.7)	Variable			UNSIGNED16	RW	No	0x0000

Copyright 2018 by Druck Limited.

Index	Name	Object Code	Sub-Index	Description	Data Type	Access	PDO Mapping	Default Value
210C	Node ID (See 3.7.1, B.2.8)	Variable			UNSIGNED8	RW	No	0x02
210D	Bit Rate (See 3.7.2, B.2.9)	Variable			UNSIGNED16	RW	No	0x00FA
2200	Calibration Access Pin (See 3.7.3, B.2.10)	Variable			UNSIGNED16	RW	No	0x0000
2201	Last Calibration Year (See 3.7.4, B.2.11)	Variable			UNSIGNED16	RW	No	0x0000
2202	Last Calibration Month (See 3.7.4, B.2.12)	Variable			UNSIGNED16	RW	No	0x0000
2203	Last Calibration Day (See 3.7.4, B.2.13)	Variable			UNSIGNED16	RW	No	0x0000
2204	Next Calibration Year (See 3.7.5, B.2.14)	Variable			UNSIGNED16	RW	No	0x0000
2205	Next Calibration Month (See 3.7.5, B.2.15)	Variable			UNSIGNED16	RW	No	0x0000
2206	Next Calibration Day (See 3.7.5, B.2.16)	Variable			UNSIGNED16	RW	No	0x0000
2207	Pressure Gain (See 3.7.6, B.2.17)	Variable			REAL32	RW	No	1.0
2208	Pressure Offset (See 3.7.7, B.2.18)	Variable			REAL32	RW	No	0.0
2209	Temperature Gain (See 3.7.8, B.2.19)	Variable			REAL32	RW	No	1.0

Copyright 2018 by Druck Limited.

Index	Name	Object Code	Sub-Index	Description	Data Type	Access	PDO Mapping	Default Value
220A	Temperature Offset (See 3.7.9, B.2.20)	Variable			REAL32	RW	No	0.0
220D	FIR Samples Size (See 3.7.10, B.2.21)	Variable			UNSIGNED8	RO	No	0x00
220E	FIR Sample Data (See 3.7.10)	Variable			DOMAIN	RO	No	NULL
220F	FIR2 Samples Size (See 3.7.10)	Variable			UNSIGNED8	RO	No	0x00
2210	FIR2 Sample Data (See 3.7.10)	Variable			DOMAIN	RO	No	NULL
2211	FIR3 Samples Size (See 3.7.10)	Variable			UNSIGNED8	RO	No	0x00
2212	FIR3 Sample Data (See 3.7.10)	Variable			DOMAIN	RO	No	NULL
2213	FIR4 Samples Size (See 3.7.10)	Variable			UNSIGNED8	RO	No	0x00
2214	FIR4 Sample Data (See 3.7.10)	Variable			DOMAIN	RO	No	NULL
2215	FIR5 Samples Size (See 3.7.10)	Variable			UNSIGNED8	RO	No	0x00
2216	FIR5 Sample Data (See 3.7.10)	Variable			DOMAIN	RO	No	NULL
2217	Selected FIR Filter (See 3.7.10)	Variable			UNSIGNED8	RW	No	0x02

Copyright 2018 by Druck Limited.

Index	Name	Object Code	Sub-Index	Description	Data Type	Access	PDO Mapping	Default Value
2218	FIR Prescaler (See 3.7.10)	Array	000	Number of Entries	UNSIGNED8	RO	No	0x05
			001	FIR pre-scaler	UNSIGNED16	RW	No	0x0000
			002	FIR2 pre-scaler	UNSIGNED16	RW	No	0x0000
			003	FIR3 pre-scaler	UNSIGNED16	RW	No	0x0000
			004	FIR4 pre-scaler	UNSIGNED16	RW	No	0x0000
			005	FIR5 pre-scaler	UNSIGNED16	RW	No	0x0000
2300	PDCR Min Pressure (See B.2.21)	Variable			INTEGER32	RO	No	
2301	PDCR Max Pressure (See B.2.22)	Variable			INTEGER32	RO	No	
2302	PDCR Type (See B.2.23)	Variable			UNSIGNED8	RO	No	
2304	PDCR Text (See 3.7.11)	Variable			VISIBLE_STRING	RW	No	0
6100	AI Input FV (See B.3.1)	Array	000	Number of Entries	UNSIGNED8	RO	No	0x02
			001	AI Input FV 1	REAL32	RO	Yes	0.0
			002	AI Input FV 2	REAL32	RO	Yes	0.0
6101	AI Input Unit	Array	000	Number of Entries	UNSIGNED8	RO	No	0x02
			001	AI Input Unit 1	UNSIGNED32	RO	No	0xFD4E0000
			002	AI Input Unit 2	UNSIGNED32	RO	No	0x00000000
6110	AI Sensor type (See B.3.2)	Array	000	Number of Entries	UNSIGNED8	RO	No	0x02
			001	AI Sensor type 1	UNSIGNED16	RW	No	0x005A
			002	AI Sensor type 2	UNSIGNED16	RW	No	0x0064

Copyright 2018 by Druck Limited.

Index	Name	Object Code	Sub-Index	Description	Data Type	Access	PDO Mapping	Default Value
6120	AI Input scaling 1 FV (See 3.8.1, B.3.3)	Array	000	Number of Entries	UNSIGNED8	RO	No	0x02
			001	AI Input scaling 1 FV 1	REAL32	RW	No	0.0
			002	AI Input scaling 1 FV 2	REAL32	RW	No	0.0
6121	AI Input scaling 1 PV (See 3.8.1, B.3.4)	Array	000	Number of Entries	UNSIGNED8	RO	No	0x02
			001	AI Input scaling 1 PV 1	REAL32	RW	No	0.0
			002	AI Input scaling 1 PV 2	REAL32	RW	No	0.0
6122	AI Input scaling 2 FV (See 3.8.1, B.3.5)	Array	000	Number of Entries	UNSIGNED8	RO	No	0x02
			001	AI Input scaling 2 FV 1	REAL32	RW	No	1.0
			002	AI Input scaling 2 FV 2	REAL32	RW	No	1.0
6123	AI Input scaling 2 PV (See 3.8.1, B.3.6)	Array	000	Number of Entries	UNSIGNED8	RO	No	0x02
			001	AI Input scaling 2 PV 1	REAL32	RW	No	1.0
			002	AI Input scaling 2 PV 2	REAL32	RW	No	1.0
6124	AI Input offset (See 3.8.1, B.3.7)	Array	000	Number of Entries	UNSIGNED8	RO	No	0x02
			001	AI Input offset 1	REAL32	RW	No	0.0
			002	AI Input offset 2	REAL32	RW	No	0.0
6130	AI Input PV (See 3.11.1, B.3.8)	Array	000	Number of Entries	UNSIGNED8	RO	No	0x02
			001	AI Input PV 1	REAL32	RO	Yes	0.0
			002	AI Input PV 2	REAL32	RO	Yes	0.0
6131	AI Physical unit PV (See 3.8.2, B.3.9, Appendix C)	Array	000	Number of Entries	UNSIGNED8	RO	No	0x02
			001	AI Physical unit PV 1	UNSIGNED32	RW	No	0xFD4E0000
			002	AI Physical unit PV 2	UNSIGNED32	RW	No	0x002D0000

Copyright 2018 by Druck Limited.

Index	Name	Object Code	Sub-Index	Description	Data Type	Access	PDO Mapping	Default Value
6148	AI Span start (See 3.8.3, B.3.10)	Array	000	Number of Entries	UNSIGNED8	RO	No	0x02
			001	AI Span start 1	REAL32	RW	No	0.0
			002	AI Span start 2	REAL32	RW	No	0.0
6149	AI Span end (See 3.8.4, B.3.11)	Array	000	Number of Entries	UNSIGNED8	RO	No	0x02
			001	AI Span end 1	REAL32	RW	No	0.0
			002	AI Span end 2	REAL32	RW	No	0.0
6150	AI Status (See 3.11.2, B.3.12)	Array	000	Number of Entries	UNSIGNED8	RO	No	0x02
			001	AI Status 1	UNSIGNED8	RO	Yes	0x00
			002	AI Status 2	UNSIGNED8	RO	Yes	0x00

Copyright 2018 by Druck Limited.

Appendix B. CANopen Value

This appendix contains data for the primary objects that appear in the following areas of the CANopen Object Dictionary:

Index	Area
0x1000 to 0x1FFF	Communications profile area.
0x2000 to 0x2FFF	Manufacturer specific profile area.
0x6000 to 0x6FFF	Standardized device profile area.

B.1 Communication Segment

B.1.1 Object 1000h: Device Type

The device type specifies the kind of device. The lower 16-bit contain the device profile number and the upper 16-bit an additional information.

B.1.2 Object 1001h: Error Register

The error register is a field of 8-bits, each for a certain error type. If an error occurs the bit has to be set.

Bit	Meaning
0	Generic error.
1	Current
2	Voltage
3	Temperature
4	Communication error (overrun, error state).
5	Device profile specific.
6	Reserved
7	Manufacturer specific.

B.1.3 Object 1003h: Pre-defined Error Field

This object holds errors that have occurred on the device and have been signaled via Emergency Object. It is an error history. Writing to sub-index 0 deletes the entire error history.

B.1.4 Object 1005h: COB-ID SYNC

COB-ID of the Synchronization object. The device generates a SYNC message if bit 30 is set. The meaning of other bits is equal to the other communication objects.

B.1.5 Object 1007h: Synchronous Window Length

It contains the length of the time window for synchronous messages in µs. When not used it is 0.

B.1.6 Object 1008h: Manufacturer Device Name

Contains the device name.

B.1.7 Object 100Ch: Guard Time

This entry contains the guard time in milli-seconds. When not used it is 0.

Copyright 2018 by Druck Limited.

B.1.8 Object 100Dh: Life Time Factor

The life time factor multiplied with the guard time gives the life time for the device. When not used it is 0.

B.1.9 Object 1010h: Store Parameter Field

This entry supports saving of parameters in non volatile memory. With a read access the device provides information about its saving capabilities.

The following parameter group is distinguished:

Sub-Index	Parameter Groups
1	All parameters.

For saving the signature “save” (0x65766173) must be written.

B.1.10 Object 1011h: Restore Default Parameters

This entry supports restoring of default parameters. With a read access the device provides information about its capabilities to restore these values.

The following group is distinguished.

Sub-Index	Parameter Group
1	All parameters.

For restoring the signature “load” (0x64616f6c) must be written.

B.1.11 Object 1012h: COB-ID Time Stamp

COB-ID of the Time Stamp Object (TIME). If bit 31 is set the device consumes the Time Stamp message and if bit 30 is set the device produces the Time Stamp message. The meaning of the other bits is equal to the other communication objects.

B.1.12 Object 1014h: COB-ID EMCY

COB-ID used for emergency message (emergency producer).

B.1.13 Object 1015h: Inhibit Time Emergency

Inhibit Time used for emergency message (emergency producer). The time has to be a multiple of 100 µs.

B.1.14 Object 1017h: Producer Heartbeat Time

The producer heartbeat time defines the cycle time of the heartbeat. When not used, the time is 0. The time has to be a multiple of 1 msec.

B.1.15 Object 1018h: Identity Object

This object contains general information about the device.

Sub-Index	Identity Object
1	Contains a unique value allocated each manufacturer.
2	Identifies the manufacturer specific product code (device version).
3	Contains the revision number. Bit 31-16 is the major revision number and bit 15-0 the minor revision number.
4	Identifies a manufacturer specific serial number.

Copyright 2018 by Druck Limited.

B.1.16 Object 1019h: Synchronous Counter Overflow Value

The synchronous counter defines if a counter is mapped into the SYNC message and the highest value the counter can reach.

Value	Meaning
0	SYNC message transmitted with length 0.
1	Reserved
2 to 240	SYNC message transmitted with length 1, first data byte contains the counter value.
241 to 255	Reserved

B.1.17 Object 1800h to 1803h: Transmit PDO Communication Parameter 1

It contains the communication parameters of the current PDO the device is able to transmit. There are 4 PDOs available.

Sub-Index	Identity Object
0	Contains the number of PDO-parameters implemented.
1	Describes transmission COB ID for each PDO.
2	Transmission type.
3	Inhibit time – Number of 100µs before transmission is repeated.
4	Compatibility entry.
5	Event timer (ms).

B.1.18 Object 1A00h to 1A03h: Transmit PDO Mapping Parameter 1

Contains the mapping for the PDO the device is able to transmit. There are 4 PDOs available.

The sub-index 0h contains the number of valid entries within the mapping record. This number of entries is also the number of the application variables which shall be transmitted with the corresponding PDO. The sub-index from 1h to number of entries contain the information about the mapped application variables. These entries describe the PDO contents by their index, sub-index and length. All three values are hexadecimal coded. The length entry contains the length of the object in bits (1 to 40h). This parameter can be used to verify the overall mapping length.

B.1.19 Object 1F80h: NMT Start-up

Use object 0x1F80 to set the start-up mode of the sensor.

Status	Description
0	Sensor power-up in pre-operational mode.
8	Sensor starts in operational mode.

B.2 Manufacturer Segment

B.2.1 Object 2003h: Current Time

Current Time is 6 bytes TIME_OF_DAY.

B.2.2 Object 2004h: Acquisition Time

The time that the last sample was taken. This is in milliseconds since start-up.

Copyright 2018 by Druck Limited.

B.2.3 Object 2005h: Acquisition Interval

The length of time between the current and previous samples in milliseconds.

B.2.4 Object 2006h: Pressure Span Overflow Count

Used in the calculation of 6150 (AI Status).

B.2.5 Object 2007h: Pressure Span Underflow Count

Used in the calculation of 6150 (AI Status).

B.2.6 Object 2008h: Temperature Span Overflow Count

Used in the calculation of 6150 (AI Status).

B.2.7 Object 2009h: Temperature Span Underflow Count

Used in the calculation of 6150 (AI Status).

B.2.8 Object 210Ch: Node ID

The CAN node ID.

B.2.9 Object 210Dh: Bit Rate

The CAN bit rate.

B.2.10 Object 2200h: Calibration Access Pin

The PIN to enable calibration.

B.2.11 Object 2201h: Last Calibration Year

Requires calibration PIN (refer to “Object 2200h: Calibration Access Pin” on page 26).

B.2.12 Object 2202h: Last Calibration Month

Requires calibration PIN (refer to “Object 2200h: Calibration Access Pin” on page 26).

B.2.13 Object 2203h: Last Calibration Day

Requires calibration PIN (refer to “Object 2200h: Calibration Access Pin” on page 26).

B.2.14 Object 2204h: Next Calibration Year

Requires calibration PIN (refer to “Object 2200h: Calibration Access Pin” on page 26).

B.2.15 Object 2205h: Next Calibration Month

Requires calibration PIN (refer to “Object 2200h: Calibration Access Pin” on page 26).

B.2.16 Object 2206h: Next Calibration Day

Requires calibration PIN (refer to “Object 2200h: Calibration Access Pin” on page 26).

B.2.17 Object 2207h: Pressure Gain

Requires calibration PIN (refer to “Object 2200h: Calibration Access Pin” on page 26).

B.2.18 Object 2208h: Pressure Offset

Requires calibration PIN (refer to “Object 2200h: Calibration Access Pin” on page 26).

B.2.19 Object 2209h: Temperature Gain

Requires calibration PIN (refer to “Object 2200h: Calibration Access Pin” on page 26).

B.2.20 Object 220Ah: Temperature Offset

Requires calibration PIN (refer to “Object 2200h: Calibration Access Pin” on page 26).

Copyright 2018 by Druck Limited.

B.2.21 Object 2300h: PDCR Min Pressure

Lowest pressure that can be measured by the pressure sensor in mbar.

B.2.22 Object 2301h: PDCR Max Pressure

Full-scale pressure rating of the pressure sensor in mbar.

B.2.23 Object 2302h: PDCR Type

Contains the pressure sensor type.

Value	Description
0	Absolute
128	Gauge

B.3 Device Profile Segment

B.3.1 Object 6100h: AI Input FV

This object represents the converted value of an analogue input module, it is not yet scaled to the physical measurement units. Scaling could be e.g. digits of the analog-to-digital converter or Ohms for Pt100 temperature measurement.

The value is left adjusted with the remaining bits to the right side of the LSB set to zero.

Value	Description
1	Pressure
2	Temperature

B.3.2 Object 6110h: AI Sensor Type

Specifies the type of sensor connected to the analogue input.

B.3.3 Object 6120h: AI Input Scaling 1 FV

This object defines the field value of the first calibration point for the analogue input channel. It is scaled in physical unit of field value.

B.3.4 Object 6121h: AI Input Scaling 1 PV

This object defines the process value of the first calibration point for the analogue input channel. It is scaled in physical unit of the process value.

B.3.5 Object 6122h: AI Input Scaling 2 FV

This object defines the field value of the second calibration point for the analogue input channel. It is scaled in physical unit of field value.

B.3.6 Object 6123h: AI Input Scaling 2 PV

This object defines the process value of the second calibration point for the analogue input channel. It is scaled in physical unit of process value.

B.3.7 Object 6124h: AI Input Offset

This object defines the additional offset value for the analogue input channel. It is scaled in physical unit of process value.

B.3.8 Object 6130h: AI Input PV

This object represents the result of the input scaling block and gives the measured quantity scaled in the physical unit of process values (e.g. degrees centigrade, kg, kN, mm etc.).

Copyright 2018 by Druck Limited.

B.3.9 Object 6131h: AI Physical Unit PV

This object assigns SI units and prefixes for the process values within the analogue input function block. The coding of the physical units listed in Appendix C, “Alternative Pressure Units,” on page 29.

B.3.10 Object 6148h: AI Span Start

This value specifies the lower limit where process values are expected. Process values, lower than this limit, are marked as negative overloaded.

B.3.11 Object 6149h: AI Span End

This value specifies the upper limit where process values are expected. Process values exceeding this limit are marked as positive overloaded.

B.3.12 Object 6150h: AI Status

This read-only object reflects the status of the analogue input channels. The combination of bit 1 and bit 2 has not to be possible.

Copyright 2018 by Druck Limited.

Appendix C. Alternative Pressure Units

This appendix contains data for the alternative pressure units.

The basic operation of the pressure transducer uses mbar for the pressure calculations. Druck uses the Customer Ordering Information to set the default units for the pressure output. The default units can be: mbar, bar, or psi.

The table below shows the values to get an output in one of the alternative pressure units.

Pressure Units		CANopen Value (Units) (Object: 0x6131 01)	Scale-Factor (Object: 0x6123 01)
mbar	millibar	0xFD4E0000	1
bar	bar	0x004E0000	0.001
Pa (N/m^2)	pascal (newton per square metre)	0x00220000	100
hPa	hectopascal	0x02220000	1
kPa	kilo pascal	0x03220000	0.1
Mpa	Mega pascal	0x06220000	0.0001
mmHg	millimetre of mercury	0x00A00000[a]	0.7500616
cmHg	centimetre of mercury	0x00A00000[a]	0.07500616
mHg	metre of mercury	0x00A00000[a]	0.0007500616
inHg	inch of mercury	0x00A00000[a]	0.02953
kg/cm^2	kilogram-force per square centimetre	0x00A00000[a]	0.001019716
kg/m^2	kilogram-force per square metre	0x00A00000[a]	10.19716
mmH_2O	millimetre of water	0x00A00000[a]	10.19716
cmH_2O	centimetre of water	0x00A00000[a]	1.019716
mH_2O	metre of water	0x00A00000[a]	0.01019716
torr	torr	0x00A00000[a]	0.7500616
atm	atmosphere	0x00A00000[a]	0.000986923
psi	pound-force per square inch	0x00A00000[a]	0.01450377
lb/ft^2	pound-force per square foot	0x00A00000[a]	2.088543
inH_2O 4°C	inch of water at 4 °C	0x00A00000[a]	0.4001775
inH_2O 60°F	inch of water at 60 °F	0x00A00000[a]	0.4021858
ftH_2O 4°C	foot of water at 4 °C	0x00A00000[a]	0.03345526
ftH_2O 60°F	foot of water at 60 °F	0x00A00000[a]	0.03351545

a. The CANopen value 0x00A00000 shows that the pressure unit is not an SI unit (refer to Appendix D, “Bibliography,” on page 31).

If other units are necessary, set the applicable values to agree with local conditions.

Copyright 2018 by Druck Limited.

Copyright 2018 by Druck Limited.

Appendix D. Bibliography

For more data, refer to the following publications:

1. CANopen Application Layer and Communication Profile
    - CiA Draft Standard DS-301 (Version 4.01)
2. CANopen Device Profile for Measurement Devices and Closed Loop Controllers
    - CiA Draft Standard Proposal DSP-404 (Version 1.0)
3. CANopen Layer Setting Services and Protocol (LSS)
    - CiA Draft Standard Proposal DSP-305 (Version 1.0)
4. CANopen Representation of SI Units and Prefixes
    - CiA Draft Recommendation DRP-303-2 (Version 1.1)

Copyright 2018 by Druck Limited.

Appendix D. Bibliography

Copyright 2018 by Druck Limited.

Office Locations

druck.com/contact

Services and Support Locations

druck.com/service

Copyright 2018 by Druck Limited. ALL RIGHTS RESERVED. This material contains one or more registered trademarks of Druck Limited and/or its subsidiaries. All third-party products and company names are trademarks of their respective holders.

129M6082 Revision E | English

druck.com

ICS Schneider Messtechnik GmbH
Briesestraße 59
D-16562 Hohen Neuendorf / OT Bergfelde

Tel.: 03303 / 50 40 66
Fax.: 03303 / 50 40 68

info@ics-schneider.de
www.ics-schneider.de