RPS/DPS8#00 Series
RPS8100 Minicore
RPS8100-#-METEO

Trench Etched Resonant Pressure Sensor

Instruction Manual

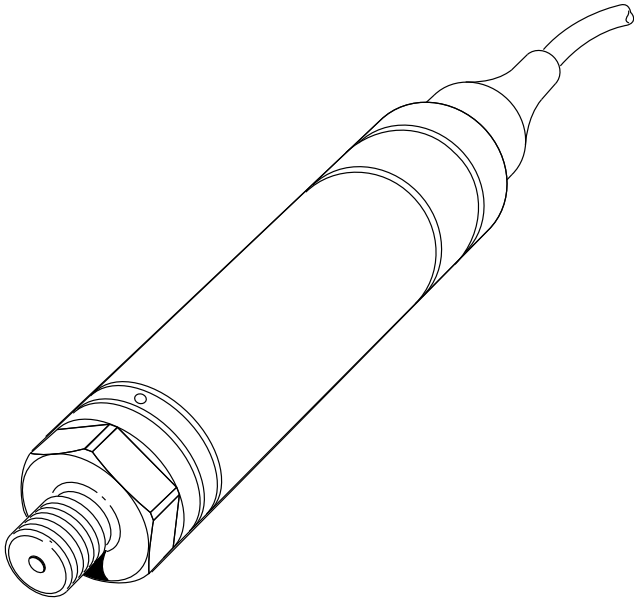

druck.com

ICS Schneider Messtechnik GmbH
Briesestraße 59
D-16562 Hohen Neuendorf / OT Bergfelde

Tel.: 03303 / 50 40 66
Fax.: 03303 / 50 40 68

info@ics-schneider.de
www.ics-schneider.de

Safety

WARNING Do not use with media that has an oxygen concentration > 21 % or other strong oxidizing agents.

This product contains materials or fluids that may degrade or combust in the presence of strong oxidizing agents.

Do not apply pressure greater than the maximum safe working pressure to the sensor.

The manufacturer has designed this sensor to be safe when operated using the procedures detailed in this manual. Do not use this sensor for any other purpose than that stated.

This publication contains operating and safety instructions that must be followed for safe operation and to maintain the sensor in a safe condition. The safety instructions are either warnings or cautions issued to protect the user and the equipment from injury or damage.

Use qualified[1] personnel and good engineering practice for all procedures in this publication.

Toxic Materials

There are no known toxic materials used in this sensor.

Maintenance

The sensor must be maintained using the manufacturer's procedures and these should be carried out by authorized service agents or the manufacturer's service departments.

https://druck.com/service

Technical Advice

For technical advice contact the manufacturer.

1. A qualified technician must have the necessary technical knowledge, documentation, special test equipment and tools to carry out the required work on this equipment.

Copyright 2010 by Druck Limited.

Symbols

Symbol	Description
CE	This equipment meets the requirements of all relevant European safety directives. The equipment carries the CE mark.
UK CA	This equipment meets the requirements of all relevant UK Statutory Instruments. The equipment carries the UKCA mark.
⚠	This symbol, on the equipment, indicates a warning and that the user should refer to the user manual.
	Druck is an active participant in the UK and EU Waste Electrical and Electronic Equipment (WEEE) take-back initiative (UK SI 2013/3113, EU directive 2012/19/EU). The equipment that you bought has required the extraction and use of natural resources for its production. It may contain hazardous substances that could impact health and the environment. In order to avoid the dissemination of those substances in our environment and to diminish the pressure on the natural resources, we encourage you to use the appropriate take-back systems. Those systems will reuse or recycle most of the materials of your end life equipment in a sound way. The crossed-out wheeled bin symbol invites you to use those systems. If you need more information on the collection, reuse, and recycling systems, please contact your local or regional waste administration. Please visit the link below for take-back instructions and more information about this initiative. **https://druck.com/weee**

Abbreviations

The following abbreviations are used in this manual.

Note: Abbreviations are the same in the singular and plural.

Abbreviation	Description
a	Absolute
ASCII	American Standard Code for Information Interchange
°C	Degrees Celsius
atm	Atmosphere
cmHg	Centimetre of mercury
COSHH	Control of Substances Hazardous to Health
CR	Carriage return

Copyright 2010 by Druck Limited.

Abbreviation	Description
dc	Direct current
EEPROM	Electrically Erasable Programmable Read Only Memory
EMC	Electro-Magnetic Compatibility
FS	Full-scale
ftH_2O	Feet of water
hPa	Hecto Pascal
Hz	Hertz
inH_2O	Inches of water
inHg	Inch of mercury
kg	Kilogram
kg/cm^2	Kilogram per centimetre squared
kg/m^2	Kilogram per metre squared
kHz	Kilohertz
kPa	Kilo Pascal
lb/ft^2	Pounds per foot squared
LF	Line feed
LSB	Least Significant Bit
mA	Milli Ampere
mbar	Millibar
mbar a	Millibar absolute
mH_2O	Metres of water
mHg	Metre of mercury
mm	Millimetre
mmH_2O	Millimetres of water
mmHg	Millimetre of mercury
MPa	Megapascal
MSB	Most Significant Bit
MSDS	Material Safety Data Sheet
MSL	Local meteorological pressure
MΩ	Mega ohm
n/a	Not applicable
Pa	Pascal
PIN	Personal Identification Number
ppm	Parts per million
psi	Pound per square inch
QFE	Field elevation
QFF	Local station pressure, reduced to mean sea level

Copyright 2010 by Druck Limited.

Abbreviation	Description
QNH	Nautical height
RF	Radio frequency
RPT	Resonant Pressure Transducer
RS-232	ANSI TIA-232 communication standard
RS-485	ANSI TIA-485 communication standard
TERPS	Trench Etched Resonant Pressure Sensor
TTL	Transistor-Transistor Logic
USB	Universal Serial Bus
V	Volt

Copyright 2010 by Druck Limited.

Contents

1. Introduction 1
   1.1 Manufacturer 1

2. Description 1
   2.1 Purpose 1
   2.2 Technical Specifications 1
   2.3 Design and Principle of Operation 2
      2.3.1 RPS/DPS8#00 Models 2
      2.3.2 RPS8100 Minicore Models 2
   2.4 Markings 3
      2.4.1 RPS/DPS8#00 Pressure Sensor 3
      2.4.2 RPS8100 Minicore Pressure Sensors 3

3. Installation & Operation 4
   3.1 General Requirements 4
   3.2 Safety Measures 5
   3.3 Connecting to a Pressure Source 6
      3.3.1 Media Compatibility 6
      3.3.2 Pressure Containment 7
   3.4 Power Requirements 7
   3.5 Software 7
      3.5.1 USB Driver 7
      3.5.2 LabVIEW Driver 8
      3.5.3 Mobile Application 8
   3.6 Maintenance 8
      3.6.1 Visual Inspection 8
      3.6.2 Cleaning 8
      3.6.3 Adjustment 8
   3.7 Returned Goods Procedure 8
      3.7.1 Safety Precautions 9
      3.7.2 Important Notice 9
   3.8 Electromagnetic Compatibility 9
      3.8.1 RPS/DPS8#00 Models 9
      3.8.2 RPS8100 Minicore Models 9
      3.8.3 Installation Requirements 9

4. RPS Pressure Measurement 10
   4.1 Measuring the Frequency 10
   4.2 Measuring the Diode Voltage 10
   4.3 Calculating Pressure 10
   4.4 Stored Coefficients 11

5. DPS Pressure Measurement 11
   5.1 Serial Data Communications Settings 12
   5.2 Applications 12
   5.3 RS-485 Connections 12
   5.4 RS-232 Connections 12
   5.5 USB Connection 13

Copyright 2010 by Druck Limited.

5.6 Measuring Pressure 13
5.7 Factory Defaults 13

6. Programming Guide 14
6.1 Command Summary 14
6.2 Communication Modes 15
6.2.1 Direct Mode 15
6.2.2 Addressed Mode 15
6.3 Command Syntax 15
6.3.1 Direct Mode Syntax 15
6.3.2 Addressed Mode Syntax 16
6.4 Measurement Commands 16
6.4.1 R – Get Reading 16
6.5 Information Commands 17
6.5.1 I – Transducer Identity 17
6.6 General Set-up Commands 18
6.6.1 A – Auto-send Reading 18
6.6.2 N – Set Device (Transducer) Address 19
6.6.3 F – Set Filter and Measurement Speed 20
6.6.4 U – Set Units 21
6.6.5 B – Global Wait Interval 21
6.6.6 X – Status Check 22
6.6.7 M – User Message 24
6.7 PIN Protected Set-up Commands 25
6.7.1 C – User Calibration 25
6.7.2 H – Change Slope 25
6.7.3 O – Communication Settings 27
6.7.4 P – Change PIN 27
6.7.5 S – Set Offset 28
6.7.6 W – Write Settings 29
6.8 Error Messages 29
6.8.1 Incorrect User Command 29
6.8.2 Transducer Fault 29

Appendix A. Fault Finding 31

Appendix B. RPS EEPROM Format 33

Copyright 2010 by Druck Limited.

1. Introduction

This manual is applicable to 8000 family of pressure sensors consisting of the following product series:

- RPS/DPS8000
- RPS/DPS8000H
- RPS/DPS8100
- RPS/DPS8200
- RPS/DPS8300
- RPS8100 Minicore
- RPS8100-#-METEO

The original language of this manual is English.

1.1 Manufacturer

The identified manufacturer of this equipment is:

"Druck Limited"

Fir Tree Lane, Groby, Leicester, LE6 0FH, United Kingdom.

Telephone: +44 116 231 7100; Fax: +44 116 231 7103

Internet: **https://druck.com**

2. Description

2.1 Purpose

The 8000 family of pressure sensors use TERPS (trench etched resonant pressure sensor) technology and are designed for continuous measurement and conversion of pressure into an electronic output.

RPS8#00 models produce a frequency and a diode voltage output. DPS8#00 models include a microprocessor to produce a serial digital output.

The sensors are of a modular design, the parameters of which are chosen by the customer at the time of order.

2.2 Technical Specifications

The sensors are divided into two groups:

a. **RPS/DPS8#00 Pressure Sensor**

The sensor has a model number of the form 'DPS8#00-T#-A#-C#-##-##' or 'RPS8#00-T#-A#-C#-##-##'.

Refer to the appropriate RPS/DPS8000, RPS/DPS8000H, RPS/DPS8100, RPS/DPS8200 or RPS/DPS8300 data sheet for technical specifications and explanation of the sensor's model number.

Model numbers appended with a four or eight-digit alphanumeric string denote the use of a customer-specific specification drawing indicating the use of additions or deviations to the data sheet specification. Refer to the specification drawing if applicable.

b. **RPS8100 Minicore Pressure Sensor**

The sensor has a model number of the form 'RPS8100-###B' or 'RPS8100-#-METEO'.

Refer to the appropriate RPS8100-METEO data sheet for technical specifications and explanation of the sensor's model number.

Copyright 2010 by Druck Limited.

RPS8100-###B sensor model numbers are appended with a four or eight-digit alphanumeric string indicating the appropriate product specification drawing number. Refer to the drawing for the specifications of the product.

2.3 Design and Principle of Operation

2.3.1 RPS/DPS8#00 Models

The sensor has a model number of the form ‘DPS8#00-T#-A#-C#-##-##’ or ‘RPS8#00-T#-A#-C#-##-##’.

The sensor consists of a pressure connector, pressure measuring module, a partially encapsulated electronics module, and electrical connection facilities, structurally combined in a cylindrical metal housing.

The pressure connector allows the sensor to be mounted to a pressurized vessel or pipework.

The pressure measuring module consists of a welded metal construction, featuring a metal diaphragm[1] (providing a flexible barrier to harsh process media), a glass-to-metal seal (for electrical connections) and a fluid filled cavity containing a silicon-based micro-machined resonant structure.

The electronics module is available in two primary variants:

a. DPS variants provide a digitally encoded signal derived from the measured frequency of the resonant structure as it responds to applied pressure. A variety of digital encoding and physical interface options are available.

b. RPS variants provide a square wave output with a frequency equal to that of the resonant structure as it responds to applied pressure. An additional output (derived from the forward voltage of a diode) provides a voltage responding to changes in temperature.

2.3.2 RPS8100 Minicore Models

The sensor has a model number of the form ‘RPS8100-###B’ or ‘RPS8100-#-METEO’.

The RPS8100 Minicore pressure sensor is designed to measure the pressure of non-condensing dry gas.

The sensor consists of a pressure connector, a silicon-based micro-machined resonant structure (directly exposed to the measured gas), an electronics module (not encapsulated), and electrical connection facilities, structurally combined in a cylindrical metal housing.

The pressure connector allows the sensor to be mounted to a pressurized vessel or pipework.

The electronics module is housed in a compartment, separated from the external atmosphere by glass-to-metal seals.

Low voltage electrical terminals are exposed at the rear of the compartment and are soldered to a short length of cable for connection to the host equipment.

The sensor provides a square wave output with a frequency equal to that of the resonant structure as it responds to applied pressure. An additional output (derived from the forward voltage of a diode) provides a voltage responding to changes in temperature.

The pressure sensor is intended to be incorporated within an original equipment manufacturer’s host product, for which additional technical regulations and standards may be applicable.

1. RPS/DPS8000, RPS/DPS8000H, RPS/DPS8200 and RPS/DPS8300 models only. RPS/DPS8100 models provide no harsh process media isolation.

Copyright 2010 by Druck Limited.

2.4 Markings

2.4.1 RPS/DPS8#00 Pressure Sensor

The sensor has a model number of the form ‘DPS8#00-T#-A#-C#-##-##’ or ‘RPS8#00-T#-A#-C#-##-##’.

The markings applied to the pressure sensors are in English, see Figure 1:

```
[1]  TERPS 8#00
[2]  PRESSURE SENSOR
[3]  #PS 8###-T#-A#-C#-H#-##
[4]  S/N ########
[5]  ### TO ### ### #
[6]  Supply: ### TO ### V ⎓
[7]  Output: ######
[8]  Temp. Range: ### TO #### ˚C
[9]  DRUCK LTD. GROBY, LE6 0FH, UK
```

1 Product name: ‘TERPS8#00’.
2 Product description: ‘PRESSURE SENSOR’.
3 Model number - To identify the meaning, refer to the product data sheet. If the model number is followed by four or eight numbers, ‘-####’ or ‘-########’, refer to the manufacturer’s specification drawing E-A3-#### or ########.
4 Serial number.
5 Pressure range limits and unit of measurement.
6 Power supply voltage range.
7 Output: ‘TTL & DIODE’, ‘RS232’, ‘RS485’, ‘USB 2.0’.
8 Ambient temperature range.
9 Manufacturer’s name and address.

Figure 1: Identification, Electrical and Pressure Markings – RPS/DPS8#00

Other data is possible, which the manufacturer can reflect in the marking, if required by technical documentation.

2.4.2 RPS8100 Minicore Pressure Sensors

2.4.2.1 RPS8100-###B Models

The markings applied to the pressure sensors are in English, see Figure 2:

```
[1]  DRUCK
[2]  RPS 8100-##B-########  S/N #######   [3]
[4]  ### TO ### ### #
[5]  Supply: ### TO ### Vdc
```

1 Manufacturer’s name.
2 Model number - The model number is followed by four or eight numbers, ‘-####’ or ‘-########’, refer to the manufacturer’s specification drawing E-A3-#### or ########.
3 Serial number.
4 Pressure range limits and unit of measurement.
5 Power supply voltage range.

Figure 2: Identification, Electrical and Pressure Markings – RPS8100-###B

Other data is possible, which the manufacturer can reflect in the marking, if required by technical documentation.

Copyright 2010 by Druck Limited.

2.4.2.2 RPS8100-#-METEO Models

The markings applied to the pressure sensors are in English, see Figure 3:

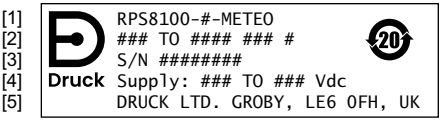

1 Model number.
2 Pressure range limits and unit of measurement.
3 Serial number.
4 Power supply voltage range.
5 Manufacturer's name and address.

Figure 3: Identification, Electrical and Pressure Markings – RPS8100-#-METEO

Other data is possible, which the manufacturer can reflect in the marking, if required by technical documentation.

3. Installation & Operation

CAUTION Until installation, keep the unit in the original container with all the covers in position. The container and covers prevent contamination and damage. When not in use, keep the connections clean at all times, and put the covers on the open connections.

3.1 General Requirements

When the sensor is received, check for completeness.

To identify the electrical and pressure connections, refer to the product data sheet or, if applicable, the specification drawing.

Do not use force when installing the sensor. Do not tighten the sensor by rotating the housing. For this purpose, a hexagon socket for the wrench is provided on the housing.

The ambient temperature and the process media to be measured must not exceed the ranges specified in the sensor specification.

In the negative temperature range it is necessary to exclude the accumulation and freezing of condensate in the working chambers and inside the connecting pipelines for gaseous media and freezing, crystallization of the medium or crystallization from it, of the individual components for liquid media.

The materials used for the primary enclosure and pressure bearing surfaces are identified in the product data sheet or, if applicable, the specification drawing. Make sure that the materials are applicable for the installation.

Before using the equipment, remove the plastic/rubber protection cap from the pressure connector.

The RPS/DPS8000, RPS/DPS8000H, RPS/DPS8200 and RPS/DPS8300 are harsh media isolated product. Isolation is achieved by hermetically sealing the sensor element, see Figure 4, in an oil filled chamber. The weight of this oil gives a g-sensitivity as a pressure offset error.

The RPS/DPS8100 is not a harsh media isolated product. The pressure media comes directly into contact with the sensor element. Care must be taken to ensure the pressure media does not

Copyright 2010 by Druck Limited.

damage the sensor element. There is negligible change in offset due to mounting position and vibration.

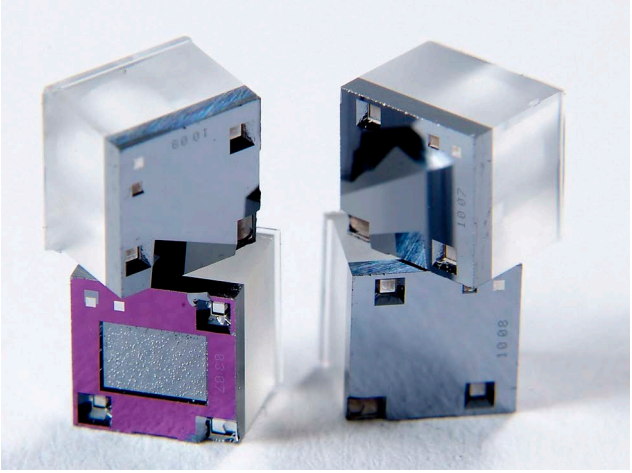

Figure 4: TERPS Sensor Element

To calibrate the 8000 Series, the unit is mounted vertically with the pressure port at the lowest point. Orientation other than this produces a pressure offset error as specified in the data sheet. The error is most noticeable at lower pressure ranges.

3.2 Safety Measures

The operation of sensors in systems where the pressure may exceed the overload values specified in the data sheet or customer-specific specification drawing is not allowed.

Connection and detachment of sensors from the mains supplying the pressure of the medium to be measured must be done after the shut-off valve is closed from the process and the pressure in the working chamber is made equal to atmospheric.

The connecting pipes should have a one-way slope (not less than 1:10) from the pressure collection point up to the sensor, if the medium to be measured is gas, and down to the sensor if the medium is liquid. If this is not possible, when measuring gas pressure at the lower points of the connecting lines, it is necessary to install sludge vessels, and when measuring the liquid pressure at the highest points, install gas collectors.

Selected devices for mounting sensors should be mounted on straight sections, at the maximum possible distance from pumps, locking devices, elbows, expansion joints and other hydraulic devices. It is especially not recommended to install sensors in front of the shut-off device if the medium to be measured is liquid. If water hammer exists in the system, it is recommended to install a hydraulic shock dampener.

To reduce the temperature acting on the isolation diaphragm when measuring vapor pressure, it is recommended to use impulse tubes. The impulse tube must first be filled with water.

Attach the sensor in a safe configuration that prevents unwanted stress (vibration, physical impact, shock, mechanical and thermal stresses). It is recommended to mount the sensor using a correctly sized lined p-clip, centrally located on the body of the sensor to provide additional support. Do not install the sensor where it can be damaged by a material that causes corrosion. Provide additional protection for the sensor if it may be damaged in service. When installing power supply and signal wiring, the possibility of condensate entering the sensor cable entry should be avoided.

Copyright 2010 by Druck Limited.

3.3 Connecting to a Pressure Source

When mounting the sensor, seal the mating surfaces. Failure to properly seal may affect performance or calibration accuracy.

Male threaded pressure connectors must not be sealed or constrained against the face at the base of the thread. The forward cone or flat face should always be used as indicated below.

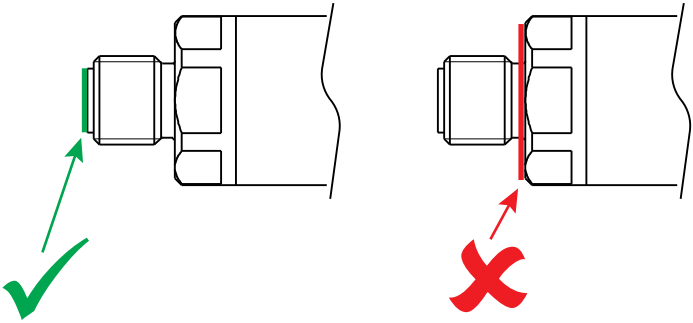

Depth versions should not be used at hyperbaric pressures above 70 bar (1000 psi), approximately 700 m (2300 ft) of water.

3.3.1 Media Compatibility

WARNING Do not use with media that has an oxygen concentration > 21 % or other strong oxidizing agents.

This product contains materials or fluids that may degrade or combust in the presence of strong oxidizing agents.

The media compatibility of the sensors is shown in Table 1.

Table 1: Media Compatibility

Product	Pressure Range	Media Compatibility
RPS/DPS8000	All available	Fluids compatible with stainless steel 316L and Hastelloy C276.
RPS/DPS8000H[a]	All available	Fluids compatible with stainless steel 316L and gold plating.
RPS/DPS8100 RPS8100 Minicore RPS8100-#-METEO	All available	Non-condensing dry gases compatible with silicon dioxide, fluorosilicone RV adhesive, stainless steel 316L, glass and brass. Brass for barbed fitting only.
RPS/DPS8200 RPS/DPS8300	All available	Fluids compatible with Hastelloy C276.

a. Suitable for use in hydrogen rich environments. Sensor will remain within stated performance and long-term stability specification in a dry H_2 environment for up to 5 years.

Note: Fluid classification complies with European Regulation (EC) No 1272/2008. Statements comply with European Pressure Equipment Directive 2014/68/EU.

Copyright 2010 by Druck Limited.

3.3.2 Pressure Containment

The pressure containment of the sensors is shown in Table 2.

Table 2: Pressure Containment

Product	Pressure Range	Pressure Containment
DPS8000[a] RPS8000	0 to 100 bar 0 to 1450 psi	200 bar maximum 2900 psi maximum
	>100 bar >1450 psi	700 bar maximum 10,000 psi maximum
DPS8000[b]	0 to 100 bar 0 to 1450 psi	200 bar maximum 2900 psi maximum
	>100 bar >1450 psi	315 bar maximum 4,565 psi maximum
RPS/DPS8000H	0 to 104 bar 0 to 1500 psi	200 bar maximum 2900 psi maximum
RPS/DPS8100 RPS8100 Minicore RPS8100-#-METEO	0 to 3.5 bar 0 to 50 psi	7 bar maximum 100 psi maximum
RPS/DPS8200 RPS/DPS8300	0 to 7 bar 0 to 100 psi	70 bar maximum 1000 psi maximum
	>7 to 70 bar >100 to 1000 psi	200 bar maximum 2900 psi maximum

a. Output options: A, B, C and U.
b. Output options: F, G and V.

3.4 Power Requirements

The sensor should be connected to a stable power supply. The power supply requirements are shown in Table 3.

Table 3: Power Supply Requirements

Product	Supply Voltage (V dc)	Supply Current
RPS Versions	5 to 28	3.5 mA nominal 20 mA peak
RS-485 and RS-232 Versions	5 to 32	16 mA nominal 32 mA peak
USB Version	Supplied by USB host	20 mA nominal 100 mA peak

3.5 Software

3.5.1 USB Driver

Drivers for the USB sensor are available from FTDI and should auto-install in any Windows® or Android™ operating system. The USB driver is available to download from the FTDI website:

http://www.ftdichip.com/FTDrivers.htm

Copyright 2010 by Druck Limited.

3.5.2 LabVIEW Driver

A National Instruments certified LabVIEW driver is available to download from the National Instruments' website:

http://sine.ni.com/apps/utf8/niid_web_display.model_page?p_model_id=30206

The driver includes a Virtual Instrument to discover a sensor's address. Example code snippets are supplied with the driver.

The LabVIEW driver is plug-and-play compatible with the USB sensor. A USB to RS-485 adapter, or a USB to RS-232 adapter, can be used to communicate with the RS-485 and RS-232 sensors.

3.5.3 Mobile Application

A TERPS mobile application for Android™ is available for free download from Google Play™. The TERPS application displays pressure from any USB TERPS sensor.

Barometric TERPS sensors can optionally display the following aeronautical parameters: QFE, QNH, QFF and MSL.

3.6 Maintenance

WARNING High pressures and temperatures are dangerous and can cause injury (Refer to pressure limits in the sales data sheet). Be careful when working on components connected to lines that have high pressures and heat. Use the applicable protection and obey all safety precautions.

3.6.1 Visual Inspection

Inspect the product for damage and corrosion. Any damage to the product must be assessed. If the housing is no longer sealed against water and/or dust, the product must be replaced.

3.6.2 Cleaning

Clean the case with a damp lint-free cloth and mild detergent.

If the product has been in contact with hazardous or toxic materials, obey all the applicable Control of Substances Hazardous to Health (COSHH) or Material Safety Data Sheet (MSDS) references and precautions when handling.

3.6.3 Adjustment

WARNING Output Calibration, Full-Scale and Offset adjustment may be subject to state requirements for verification of metrological equipment.

For some models, the Output Calibration, Full-Scale and Offset settings can be adjusted. For instructions see Chapter 6, "Programming Guide," on page 14.

Note: Druck can provide a calibration service that is traceable to international standards.

3.7 Returned Goods Procedure

To repair or calibrate the sensor, return it to the applicable Druck Service Department.

Please contact our Service Department, and get a Return Authorization number.

Please supply these details:

- Product (e.g. DPS8000 Pressure Sensor)
- Pressure range
- Serial number
- Details of defect / work to be undertaken
- Calibration traceability requirements

Copyright 2010 by Druck Limited.

- Operating conditions

3.7.1 Safety Precautions

To prevent possible injury when we receive the product, you must also tell us if the product has been in contact with hazardous or toxic materials. Please supply the applicable Control of Substances Hazardous to Health (COSHH) or Material Safety Data Sheet (MSDS) references and precautions.

3.7.2 Important Notice

Service or calibration by unauthorized sources will affect the warranty and may not guarantee further performance.

3.8 Electromagnetic Compatibility

3.8.1 RPS/DPS8#00 Models

The sensor has a model number of the form ‘DPS8#00-T#-A#-C#-##-##’ or ‘RPS8#00-T#-A#-C#-##-##’.

The pressure sensor complies with the European Electromagnetic Compatibility Directive 2014/30/EU.

When appropriately installed the sensors meet and exceed the Commercial and Industrial specifications indicated in Table 4:

Table 4: EMC Standards

RPS/DPS8#00 Series
EN 61000-6-1:2007
EN 61000-6-2:2005
EN 61000-6-3:2007 + A1:2011
EN 61000-6-4:2007 + A1:2011
EN 61326-1:2013
EN 61326-2-3:2013

3.8.2 RPS8100 Minicore Models

The sensor has a model number of the form ‘RPS8100-###B’ or ‘RPS8100-#-METEO’.

Minicore products are sold as a component for assembly into equipment. It remains the responsibility of the buyer, assembler or installer to ensure the compliance of the overall equipment with the applicable laws, regulations and standards of the country of use.

3.8.3 Installation Requirements

3.8.3.1 Power Supply and Metering

The quality of the power supply and monitoring equipment will directly affect the EMC performance of the entire system. Since “Druck Limited” has no control over the installation of the sensor it must remain the responsibility of the user to ensure that the EMC performance of the system is adequate.

To maintain good immunity from electromagnetic disturbances present on the system power supply, the power supply should filter any transient interference from the incoming line and present a clean regulated DC supply to the sensor. The monitoring equipment should likewise be immune from the effects of electromagnetic disturbances and not impart disruptive signals on the connections to the sensor.

The sensor is not intended for connection to a DC distribution network.

Copyright 2010 by Druck Limited.

3.8.3.2 Cable Type

Due to the small size of the sensor it is unlikely to be directly affected by radiated RF energy. Any RF energy that gets into the circuit will probably enter via the interconnecting cable.

To minimize the effect of nearby circuits and events, it is necessary to use screened cable between the sensor and power supply / monitoring equipment. Failure to do so will invalidate the EMC tests conducted by “Druck”.

The choice of cable type should reflect the environment through which it is going to run. Screened cable should always be used where electrical noise is present. Good cabling practice will be reflected in signal quality.

3.8.3.3 Earthing

For the screening of the cable to be effective, it is essential that the screen or drain conductor is permanently bonded to earth (ground). This should take place at the monitoring end of the cable as close to the power supply as practical. Protection should be afforded to any unscreened section of cable or circuit by means of a screened enclosure.

4. RPS Pressure Measurement

The RPS version of the TERPS sensor requires the user to measure a frequency and a voltage to calculate pressure. The TERPS sensor has a very high level of repeatability that needs to be matched by the measurement system.

Note: Best practice, when measuring a TERPS device, take both the frequency and voltage measurements together. Where this is not possible, the measurements should be taken as closely together as possible. Control the environment in which the TERPS is situated so it is not subjected to sudden changes in temperature and pressure.

4.1 Measuring the Frequency

The frequency of the TERPS sensor element is output as a TTL square wave referenced to ground in the range of 24 to 40 kHz. The frequency of the square wave needs to be measured to a better than 6.5 digits (i.e. 30 kHz to better than 0.05 Hz) to allow the sensor to meet quoted specification.

To make sure the calculated output is correct, the measurement device should be regularly calibrated (refer to the manufacturer’s instructions) against a traceable standard.

4.2 Measuring the Diode Voltage

The diode signal is referenced to the ‘-VE TEMP’ electrical connection where available, otherwise the diode signal is referenced to the ‘GROUND’ connection. It is a nominal 0.5 V at room temperature, and changes with a nominal -2 mV/°C. To achieve the quoted specification of the sensor this signal must be measured to better than 0.01 mV.

To make sure the calculated output is correct, the measurement device should be regularly calibrated (refer to the manufacturer’s instructions) against a traceable standard.

4.3 Calculating Pressure

During manufacture, a large number of pressures and temperatures are applied to the sensor to build-up a mathematical description of its behavior. This data is then used to generate a polynomial equation that relates the measured outputs from the sensor (bridge output and temperature output) to the applied pressure.

The following example assumes a 5th order pressure (P^5) and a 4th order temperature signal (T^4). If other orders of fit are used, these equations will need to be expanded to suit.

This equation is in the form:

Copyright 2010 by Druck Limited.

$$P = \sum_{i=0}^{5} \sum_{j=0}^{4} (K_{i,j})(x - X)^i (y - Y)^j$$

where: P = Applied pressure in mbar

$K_{i,j}$ = Calibration coefficient

x = Pressure signal in Hz

X = Pressure normalizing factor

y = Temperature signal in mV

Y = Temperature normalizing factor

The coefficients $K_{i,j}$, X and Y are printed on the calibration certificate supplied with the pressure sensor. A sample set is shown in Table 5:

Table 5: Sample Coefficients

Sample Coefficients		Sample Coefficients	
Coefficient	**Value**	**Coefficient**	**Value**
K00	9.173625E+02	K31	2.975355E-14
K01	-8.654275E-02	K32	-1.591914E-16
K02	3.705644E-05	K33	-3.095734E-18
K03	-3.071498E-08	K34	0.000000E+00
K04	0.000000E+00	K40	4.689744E-15
K10	3.792730E-01	K41	-1.867269E-18
K11	4.884866E-06	K42	-2.591512E-20
K12	-8.219704E-09	K43	6.066456E-23
K13	-3.283229E-11	K44	0.000000E+00
K14	0.000000E+00	K50	-2.043712E-20
K20	9.252440E-06	K51	-4.652603E-21
K21	4.893925E-11	K52	2.124089E-23
K22	2.872573E-14	K53	3.812421E-25
K23	-1.617304E-15	K54	0.000000E+00
K24	0.000000E+00	X	2.425645E+04
K30	1.185548E-10	Y	5.577031E+02

4.4 Stored Coefficients

The coefficients are also stored internally on a serial EEPROM. See Appendix B for details on data format and communication information.

The internal EEPROM is only available on some electrical connector variants of the RPS8#00 series, see data sheet or calibration certificate for electrical connection details.

5. DPS Pressure Measurement

Communication is generally in the form of ASCII text.

Copyright 2010 by Druck Limited.

5.1 Serial Data Communications Settings

Bi-directional digital communication, no handshaking, 9600 baud, 8 bit data, 1 stop bit.

5.2 Applications

The sensor may be used as a single transducer directly connected to a serial interface. It can also be part of a network of devices using the programmed addressing facility.

5.3 RS-485 Connections

Standalone RS-485 electrical connections:

i. RS-485 B (or RS-485 -)

ii. +ve supply

iii. 0V supply

iv. RS-485 A (or RS-485 +)

v. Transducer body (screen)

Note: For electrical connections refer to the sales data sheet.

Other connectors available, refer to manufacturer.

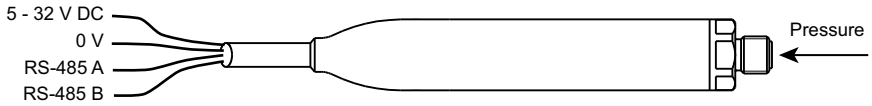

Figure 5: RS-485 Direct Connection

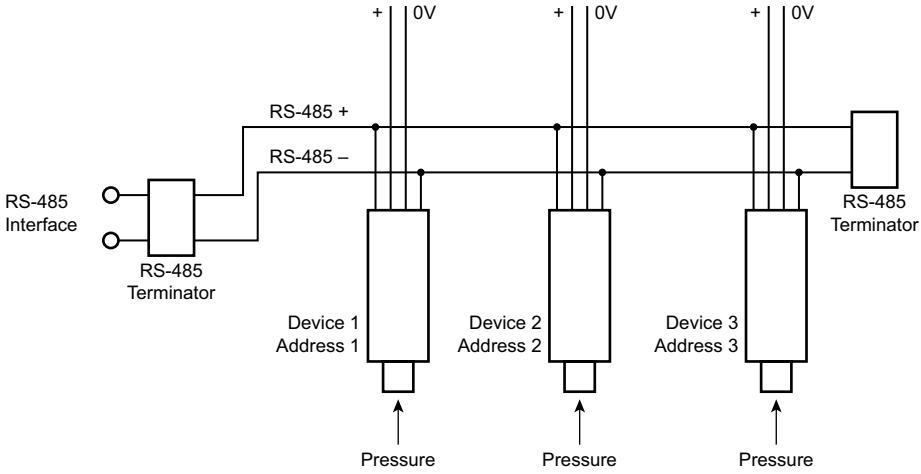

Figure 6: RS-485 Network Connection

5.4 RS-232 Connections

Standalone RS-232 electrical connections:

i. RS-232 Tx

ii. +ve supply

iii. 0V supply

Copyright 2010 by Druck Limited.

iv. RS-232 Rx

Note: For electrical connections refer to the sales data sheet.

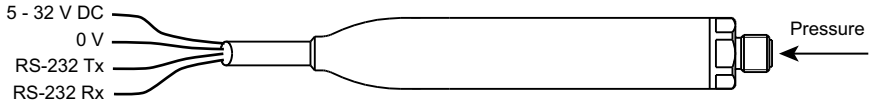

Figure 7: RS-232 Direct Connection

5.5 USB Connection

Standalone USB electrical connection:

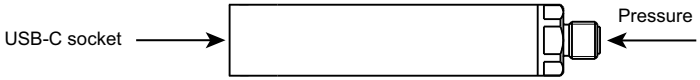

Figure 8: USB Connection

The maximum USB cable length is 3 metres (9 ft 10 in). The transducer can be connected to a PC, or to a mobile device.

Drivers are available for the following operating systems:

- Android™
- Linux®
- Microsoft Windows®

5.6 Measuring Pressure

The sensor continuously calculates a value for applied pressure asynchronously from communication according to the rates set by the filter arrangement.

5.7 Factory Defaults

Transducers are shipped with the following factory defaults (unless alternatives have been requested):

Table 6: Factory Defaults

Parameter	Value
Units	Default units are factory set during ordering.
PIN	000 (not set)
Address	Direct mode
Long error messages	Present
Communications Set-up	9600, 8, N, 1
Update rate	1 reading/second
Filter	2
User message	None
Mode	Direct

Copyright 2010 by Druck Limited.

6. Programming Guide

The commands have been defined for direct mode operation (address 0). In the addressed mode an address field must be added to the start of the command and reply.

6.1 Command Summary

The following functions can be performed using the serial link:

Table 7: Command Summary

Group	Function	Command
Measurement	Request current pressure reading	R
Information	Identity and set-up information	I
General Set-up	Set device address	N
	Set automatic transmission interval. Also used to set if units are output as text (*A).	A
	Pressure units	U
	Pressure measurement speed and filter	F
	Bus wait interval	B
	Status check	X
PIN Set-up	Save settings	W
	Communication settings	O
	User message	M
	Digital output calibration	C
	Set offset	S
	Set full-scale	H
	Change PIN	P

i. Commands are processed on receipt of a <CR>. If no character is received for 5 seconds the sensor returns to original state.

ii. The backspace character deletes typing errors.

iii. All <LF> characters are removed from the incoming string before processing, so <CR> = <CRLF>. The number of line terminating <CR> or <LF> characters in the reply message is set using the ‘O’ command.

Table 8: Query Summary

Group	Function	Query
General Set-up	Automatic transmission interval?	A,?
	Device address?	N,?
	Pressure filter settings?	F,?
	Pressure units?	U,?

Copyright 2010 by Druck Limited.

Table 8: Query Summary

Group	Function	Query
PIN Set-up	Digital output calibration	C,?
	Full-scale value?	H,?
	User message?	M,?
	Communication settings?	O,?
	PIN set?	P,?
	Offset value?	S,?

6.2 Communication Modes

The TERPS smart transducer operates in one of two operating modes: direct and addressed. These modes are controlled by sending the transducer an address number, see Section 6.3.2 on page 16.

6.2.1 Direct Mode

The valid address in direct mode is zero. In this mode, the transducer can continuously transmit data at an interval set by the user. Before any command can be sent to the transducer, the data stream must be stopped by sending a single byte character or back space. The stop character is lost and not parsed with the instruction. The data stream is stopped and will resume after 5 seconds of no character input.

Note: On shipment, sensors are set to direct mode as default.

6.2.2 Addressed Mode

The valid address in addressed mode is a number between 1 and 98. In this mode, data has to be polled from the transducer using the valid address. All devices on the network respond to the address 0 for the R, I and B commands. The reply timing depends on the address of the sensor. Each sensor delays its response for a set number of characters. See Section 6.6.5, “B – Global Wait Interval,” on page 21 for more detail.

Note: The 0:I command returns only the sensor serial number.

6.3 Command Syntax

A sequence of single letter command, preceded by a space, controls the transducer. Some commands require one or more numeric values to follow the command letter. The correct number of parameters must be sent for this particular command. The following command syntax rules apply:

i. A comma separates all command fields.

ii. The transducer accepts upper-case or lower-case letters.

iii. Numeric values must be entered using a decimal point, not a decimal comma, to separate the integer and fractional components.

iv. Characters to separate numeric values into tens or thousands must not be used.

6.3.1 Direct Mode Syntax

Direct mode commands are in the form:

Copyright 2010 by Druck Limited.

Command: **<SPACE><Command>,<P1>,<P2>,…,<Pn><CR>**

where:	<SPACE>	single space
	<Command>	single letter instruction
	<P1> … <Pn>	numeric values, e.g. 123.456, -1.2345E02, or 1.23456E-03

The following example selects the output update of one reading every 3 seconds:

Command: **<SPACE>A,3<CR>**

6.3.2 Addressed Mode Syntax

In this mode an address field must be added to the start of the general format as follows:

Command: **<SPACE><Address>:<Command>,<P1>,<P2>,…,<Pn><CR>**

where:	<SPACE>	single space
	<Address>	address of the transducer to send the command
	':'	end of the address field
	<Command>	single letter instruction
	<P1> … <Pn>	numeric values, e.g. 123.456, -1.2345E02, or 1.23456E-03

The following example gets the device at address 1 to transmit pressure:

Command: **<SPACE>1:R<CR>**

Commands R, I and B support global addressing. If a command with the address zero is sent:

Global Command: **<SPACE>0:R<CR>**

Each sensor on the bus will reply with the pressure delayed by a time period dependent on the address. See Section 6.6.5, "B – Global Wait Interval," on page 21 for more details.

Sensor with address zero does not reply to this command.

6.4 Measurement Commands

6.4.1 R – Get Reading

This command polls the devices in the network for a reading. Although used mainly in the addressed mode it can also be used in direct mode.

Command: **<SPACE>R<CR>**

Reply: <Pressure value><CR>

Result: Current pressure reading is transmitted.

Command: **<SPACE>*R<CR>**

Reply: <Pressure value><Pressure units><CR>

Result: Current pressure reading and the units of pressure measurement are transmitted.

Query: **n/a**

Copyright 2010 by Druck Limited.

Additional output formats are available:

Command	Output
R	<Pressure reading><CR>
R1	<Pressure reading>,<Temperature reading><CR>
R2	<Temperature reading><CR>
R3	#<IEEE pressure reading><CR>
R4	#<IEEE pressure reading>#<IEEE temperature reading><CR>
R5	#<IEEE temperature reading><CR>

where:	<Pressure reading>	value for pressure in ASCII text
	<Temperature reading>	value for temperature in ASCII text
	#<IEEE pressure reading>	calculated pressure as IEEE754 binary floating point number
	#<IEEE temperature>	calculated temperature as IEEE754 binary floating point number

Use *R, *R1 or *R2 to also output pressure units.

character indicates the next four characters will be non-ASCII and may contain control characters.

6.5 Information Commands

6.5.1 I – Transducer Identity

This command gets the identity and set-up data from the transducer. Either formatting character can be used with this command.

Command: **<SPACE>I<CR>**

Reply: <Unit type>,<Serial Number>,<Style>,<Calibration Unit>,<Minimum Pressure>,<Maximum Pressure>,<Manufacture Date>,<Software Version>,<Transmission Interval>,<Units Sent Y/N>,<Measurement Speed>,<Filter Number>,<Filter Prescaler>,<User Message>,<Units>,<Pin Set Y/N>,<User Zero Y/N>,<User Full-scale Y/N><Sensor Serial Number>,<Checksum><CR>

Command: **<SPACE>*I<CR>**

Copyright 2010 by Druck Limited.

Reply: Unit Type = <Unit type>

Serial Number = <Serial Number><CR>
Style = <Style><CR>
Minimum Pressure = <Minimum Pressure><CR>
Maximum Pressure = <Maximum Pressure><CR>
Manufacture Date = <Manufacture Date><CR>
Software Version = <Software Version><CR>
Transmission Interval = <Transmission Interval><CR>
Units Sent = <Units Sent Y/N><CR>
Measurement Speed = <Measurement Speed><CR>
Filter Factor = <Filter Number><CR>
Filter Step = <Filter Prescaler><CR>
User Message = <User Message><CR>
Units = <Units Text><CR>
PIN Set = <Pin Set Yes/No><CR>
User Zero = <User Zero Yes/No><CR>
User FS = <User Full-scale Yes/No><CR>
Sensor SN = 01/01/01<CR>
Internal Checksum = <Checksum><CR>

Global Command: **<SPACE>0:I<CR>**

Reply: <Serial Number><CR>

Query: **same as above**

6.6 General Set-up Commands

6.6.1 A – Auto-send Reading

This command sets the interval between each transmission. The interval can be to two decimal places, i.e., 1.25 seconds. Entering a negative number causes an error. Setting the interval to 0 stops the auto-send.

Note: Setting this interval to less than the measurement interval, causes the output of the same reading twice or more.

Command: **<SPACE>A,<Interval><CR> or <SPACE>*A,<Interval><CR>**

where: <Interval> is a number between 0.01 and 9999, or 0. This is the nominal interval in seconds between successive transmissions.

Reply: None in network mode.

Reply: In direct mode:

<Pressure reading><CR>

Result: A pressure reading is transmitted every <Interval> seconds in the format set in the set-up commands.

‘A’ command optionally can be sent with two parameters:

Copyright 2010 by Druck Limited.

Command: **<SPACE>A,<Format>,<Interval><CR>**

where: <Interval> is a number between 0.01 and 9999, or 0. This is the nominal interval in seconds between successive transmissions.

<Format> Output format number selected from the following range:

Format	Equivalent	Output
0	R	<Pressure>
1[a]	*R	<Pressure> <Units>
4	R1	<Pressure>,<Temperature>
5	*R1	<Pressure>,<Temperature> <Units>
6	R2	<Temperature>
7	*R2	<Temperature> <Units>
8	R3	#<IEEE pressure>
10	R4	#<IEEE pressure>#<IEEE temperature>
12	R5	#<IEEE temperature>

a. Default format.

Reply: None in network mode.

Reply: In direct mode:

As per selected format.

Query: **<SPACE>A,?<CR>**

Reply: <Format number>,<Transmission interval set><CR>

Query: **<SPACE>*A,?<CR>**

Reply: Format = <Format number><CR>, Interval = <Transmission interval set><CR>

6.6.2 N – Set Device (Transducer) Address

This command sets the address of the transducer. A valid address is a number between 0 and 98. Setting the address to zero causes the transducer to go into direct mode. All other address settings cause the transducer to go into network mode. This command has a secondary function and uses N,0 or *N,0 to change the length of error messages (where: 0 = direct mode).

Command: **<SPACE>N,<New Address><CR>**

Reply: n/a

Command: **<SPACE>N,0<CR>**

where: <New Address> is 0 for direct mode.

Reply: n/a

Result: Changes to short error messages.

Copyright 2010 by Druck Limited.

Command: **<SPACE>*N,0<CR>**

where: <New Address> is 0 for direct mode.

Reply: n/a

Result: Changes to long error messages.

In the example command below, the transducer at address 1 is changed to long error messages:

Command: **<SPACE>1:*N,1<CR>**

Reply: n/a

Query: **<SPACE>N,?<CR>**

Reply: <Device Address><CR>

Query: **<SPACE>*N,?<CR>**

Reply: Device Address = <Device Address><CR>

6.6.3 F – Set Filter and Measurement Speed

The filter command selects which of five available FIR filters are selected and the rate at which values are put into the FIR filter.

Command: **<SPACE>F,<Filter number><CR>**

Reply: n/a

where: <Filter number> is between 0 and 5, see table below.

Query: **<SPACE>F,?<CR>**

Reply: <Filter number>,<Pre-scaler><CR>

Query: **<SPACE>F,<Filter number>,<Pre-scaler><CR>**

Reply: n/a

where: <Filter number> is between 0 and 5, see table below.

<Pre-scaler> is the rate at which values are put into the FIR filter in ms (minimum 1 ms maximum 1000 ms).

Filter	Taps	Shape	Pre-scaler (ms)	Total Length (ms)	Description
0[a]	1	n/a	10	10	No filter
1	2	Average	10	20	Relatively quick
2	5	Average	100	500	Default
3	5	Low pass	10	50	20 Hz Low pass
4	10	Average	100	1000	Slow averaging
5	50	Average	1000	50,000	Slowest

a. Filter 0 is no filter and always defaults to 10 ms update rate.

Copyright 2010 by Druck Limited.

6.6.4 U – Set Units

This command sets the units of pressure measurement.

Command: **<SPACE>U,<Unit number><CR>**

where: <Unit number> is a number between 0 and 24 used to select the required units.

Reply: n/a

Result: Changes the pressure units of the transmitted reading.

Query: **<SPACE>U,?<CR>**

Reply: <Unit number><CR>

Command: **<SPACE>*U<CR>**

Reply: (Interactive)

Current units are <Units> (<unit number>)<CR>
<CR>

0	-	mbar<CR>	13	-	mH_2O<CR>
1	-	Pa<CR>	14	-	torr<CR>
2	-	kPa<CR>	15	-	atm<CR>
3	-	MPa<CR>	16	-	psi<CR>
4	-	hPa<CR>	17	-	lb/ft^2<CR>
5	-	bar<CR>	18	-	inHg<CR>
6	-	kg/cm^2<CR>	19	-	$inH_2O4°C$<CR>
7	-	kg/m^2<CR>	20	-	$ftH_2O4°C$ <CR>
8	-	mmHg<CR>	21	-	mbar<CR>
9	-	cmHg<CR>	22	-	$inH_2O20°C$<CR>
10	-	mHg<CR>	23	-	$ftH_2O20°C$<CR>
11	-	mmH_2O<CR>	24	-	mbar<CR>
12	-	cmH_2O<CR>			

Note: mbar can be selected using codes 0, 21 or 24.

Result: Each of these non-volatile commands changes the pressure units of the transmitted reading.

Query: **<SPACE>*U,?<CR>**

Reply: Units = <Unit number><CR>

6.6.5 B – Global Wait Interval

This command is used to set or display the delay between replies to global commands.

Command: **<SPACE>B,?<CR>**

Reply: <Wait interval><CR>

Command: **<SPACE>B,<Wait interval><CR>**

Copyright 2010 by Druck Limited.

Reply: n/a

where: <Wait interval> is the number of characters delay per address at the current baud rate.

On issuing a global command such as 0:R<CR> each sensor on the bus will reply after a delay equal to (<Address> - 1) × <Wait interval>.

For example if three sensors are on a bus configured as address 1, 2 and 4 with the default bus wait interval, on the command as 0:I<CR> sensor at address 1 will immediately reply with:

Reply: 1:<Serial number><CR>

Sensor 2 will wait for 22 characters at current baud rate before replying with:

Reply: 2:<Serial number><CR>

And Sensor 4 will wait for 66 characters at current baud rate (22 × 3) before replying with:

Reply: 4:<Serial number><CR>

The bus wait interval can be optimized based on system parameters such as required reply length, baud rate and update rate.

6.6.6 X – Status Check

This command is used to check the status of the sensor.

Command: **<SPACE>X,?<CR>**

Reply: <Pressure status>,<Temperature status>,<Pressure ADC/TERPS status>,<Temperature ADC status>,<Self-test status>,<Startup status><CR>

Command: **<SPACE>*X,?<CR>**

Reply: PresTsk = <Pressure status><CR>

TempTsk = <Temperature status><CR>

PresAdc = <Pressure ADC/TERPS status><CR>

TempAdc = <Temperature ADC status><CR>

SelfTst = <Self-test status><CR>

StartUp = <Startup status><CR>

A status reply of 0x00000000 indicates no errors. See Table 9, Table 10 and Table 11 for an explanation of the error codes. The error codes in ‘Self-test status’ and ‘Startup status’ latch and retain the error state on an error’s first occurrence. All error codes will be lost when power is removed from the sensor.

The sensor will automatically perform a self-test at periodic intervals. The result of the self-test can be viewed in the self-test status reply.

Table 9: Pressure Status, Temperature Status, Pressure ADC/TERPS Status and Temperature ADC Status

Bit	Description
1 to 4	Invalid value
5	Timeout / Stuck value
12	Upper range limit

Copyright 2010 by Druck Limited.

Table 9: Pressure Status, Temperature Status, Pressure ADC/TERPS Status and Temperature ADC Status

Bit	Description
13	Lower range limit
14	Upper range value
15	Lower range value
21	Any of above

Table 10: Self-test Status

Bit	Description
21	Any below
27	RAM CRC

Table 11: Startup Status

Bit	Description
20	Any below
23	External crystal fail
24	Critical parameter range error
25	Dictionary defaulted
26	RAM Load
27	RAM CRC
28	Watchdog
29	Flash User CRC
30	Flash Factory CRC
31	Code CRC

The following example is a pressure error. PresTsk has bit 21 set to 1 to indicate that an error is present. Bit 14 is set to 1 indicating that it is a upper range value error.

Command: **<SPACE>*X,?<CR>**

Reply: PresTsk = 0x00204000<CR>

TempTsk = 0x00000000<CR>
PresAdc = 0x00000000<CR>
TempAdc = 0x00000000<CR>
SelfTst = 0x00000000<CR>
StartUp = 0x00000000<CR>

The following example is a self-test status error. SelfTst has bit 21 set to 1 to indicate that an error is present. Bit 27 is set to 1 indicating that it is a RAM CRC error.

Command: **<SPACE>*X,?<CR>**

Copyright 2010 by Druck Limited.

Reply: PresTsk = 0x00000000<CR>

TempTsk = 0x00000000<CR>
PresAdc = 0x00000000<CR>
TempAdc = 0x00000000<CR>
SelfTst = 0x08200000<CR>
StartUp = 0x00000000<CR>

The following example is a startup status error. StartUp has bit 20 set to 1 to indicate that an error is present. Bit 23 is set to 1 indicating that it is an external crystal failure.

Command: **<SPACE>*X,?<CR>**

Reply: PresTsk = 0x00000000<CR>

TempTsk = 0x00000000<CR>
PresAdc = 0x00000000<CR>
TempAdc = 0x00000000<CR>
SelfTst = 0x00000000<CR>
StartUp = 0x00900000<CR>

Consult the factory for persistent non-zero error values.

6.6.7 M – User Message

This command sets a user defined message of 32 characters stored in non-volatile memory. Only ASCII characters 0 to 9, a to z, A to Z and the special characters in Table 12 are permitted. The use of other characters causes the sensor to reject the command.

Table 12: Permitted Special Characters

Character	ASCII
-	0x2D
.	0x2E
<	0x3C
=	0x3D
>	0x3E
_	0x5F

Note: The user defined message is not permitted to contain space characters (ASCII 0x20). Consider using an underscore character (ASCII 0x5F) as a replacement.

Command: **<SPACE>M,<Message><CR>**

Reply: n/a

Command: **<SPACE>*M,<Message><CR>**

Reply: n/a

Query: **<SPACE>M,?<CR>**

Reply: <Message><CR>

Copyright 2010 by Druck Limited.

Query: **<SPACE>*M,?<CR>**

Reply: Message = <Message><CR>

6.7 PIN Protected Set-up Commands

6.7.1 C – User Calibration

This command allows the user to perform a two point calibration on the output of the device. The calibration routine requires two pressures to be applied within the operating extremes and in units of pressure measurement set in the transducer. The software calculates an offset and gain correction to all subsequent readings.

Command: **<SPACE>*C,<PIN>,mode,<Pressure><CR>**

Non-interactive calibration requires the C command to be used twice, i.e. two calibration pressures must be entered for a straight line fit. Proceed as follows:

Apply pressure 1, when stable send:

Command: **<SPACE>*C,<PIN>,1,<Pressure 1><CR> or**
<SPACE>C,<PIN>,1,<Pressure 1><CR>

where: <PIN> is the PIN of the transducer.
<Pressure 1> is applied pressure in sensor units.

Apply pressure 2, when stable send:

Command: **<SPACE>*C,<PIN>,2,<Pressure 2><CR> or**
<SPACE>C,<PIN>,2,<Pressure 2><CR>

where: <PIN> is the PIN of the transducer.
<Pressure 2> is applied pressure in sensor units.

Result will be updates to the gain and offset parameters.

Query: **<SPACE>*C,?<CR>**

Reply: Pressure gain = <Gain><CR>

Pressure offset = <Offset><CR>

Query: **<SPACE>C,?<CR>**

Reply: <Gain>,<Offset><CR>

6.7.2 H – Change Slope

This command changes the slope of the output function of the transducer.

INFORMATION **Proceed with caution when using this command.**
Do not use the H and S commands together.
Use one command and then assess the result before continuing.

Copyright 2010 by Druck Limited.

The relationship between the applied pressure and the output signal can be shown in graphic form:

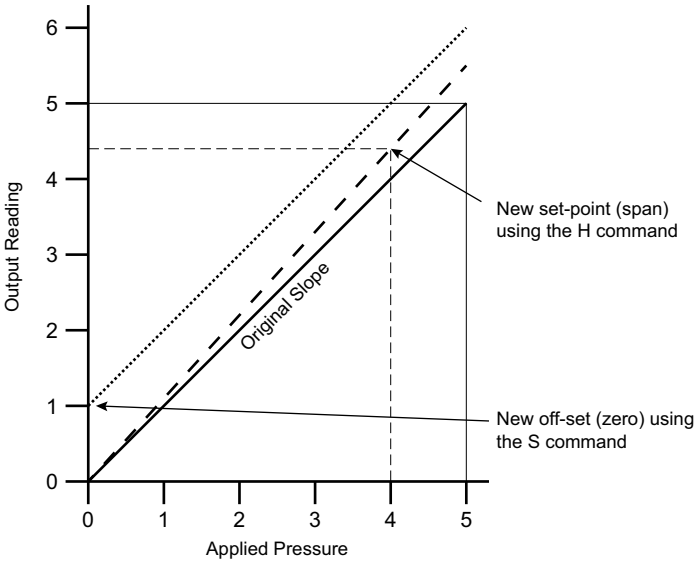

Figure 9: Output to Applied Pressure Graph

If S remains at 0 (the before value) and the H value is changed, the slope “pivots” around zero.

If H remains the same (slope) and the S value is changed the whole slope goes higher or lower by the S value.

Command: **<SPACE>H,<PIN>,<Pressure><CR>**

where: <PIN> is the PIN of the transducer.

<Pressure> is the new span pressure.

Reply: n/a

Query: **<SPACE>H,?<CR>**

Reply: <Slope>,<Set-point><CR>

Query: **<SPACE>*H,?<CR>**

Reply: Slope = <Slope><CR>

Set At =<Set-point><Units><CR>

Where the slope is a gradient and set-point is the reading value entered for an applied pressure.

Copyright 2010 by Druck Limited.

6.7.3 O – Communication Settings

This command sets the communications for the transducer.

Table 13: Communication Settings

Setting	Value
Baud Rate	9600, 19200, 38400, 57600, 115200 or 230400
Parity	Set with a single letter: I = Ignore, N = None, O = Odd, E = Even
Character Length	8 only
Stop Bits	1 or 2
Termination Characters	1[a] or 2[b]

a. Transmitted lines end in <CR>, received lines must end in <CR>.
b. Transmitted lines end in <CR><LF>, received lines may end in <CR> or <CR><LF> or <LF><CR>.

Command: **<SPACE>O,<PIN>,<Baud Rate>,<Parity>,<Character Length>,<Stop Bits>,<Number of Termination Characters><CR>**

Reply: n/a

Command: **<SPACE>*O,<PIN>,<Baud Rate>,<Parity>,<Character Length>,<Stop Bits>,<Number of Termination Characters><CR>**

Reply: n/a

Query: **<SPACE>O,?<CR>**

Reply: <Baud Rate>,<Parity>,<Character Length>,<Stop Bits>,<Number of Termination Characters><CR>

Query: **<SPACE>*O,?<CR>**

Reply: Baud Rate = <Baud Rate><CR>

Parity = <Parity - Ignore/None/Odd/Even><CR>

Data Bits = <Char Length><CR>

Stop Bits = <Stop Bits><CR>

Term Chars = <Number of Termination Characters><CR>

Result: Save settings using W command (see below). These settings take effect after switching off then on the power supply for the transducer.

6.7.4 P – Change PIN

This command sets the PIN of the transducer that must be used to access the PIN protected settings. To change this setting the current PIN must be used. A PIN must contain three characters. Only ASCII characters 0 to 9 are permitted. The use of other characters causes the sensor to reject the command.

Copyright 2010 by Druck Limited.

Command: **<SPACE>P,<Current PIN>,<New PIN><CR>**

where: <Current PIN> is the PIN of the transducer.
<New PIN> is the replacement PIN.

Reply: n/a

Result: The PIN of the transducer changes to new PIN.

Command: **<SPACE>*P,<Current PIN>,<New PIN><CR>**

where: <Current PIN> is the PIN of the transducer.
<New PIN> is the replacement PIN.

Reply: n/a

Result: The PIN of the transducer changes to new PIN.

Query: **<SPACE>P,?<CR>**

Reply: (Y if PIN set, N if PIN not set)<CR>

Query: **<SPACE>*P,?<CR>**

Reply: Pin Set = (Y if PIN set, N if PIN not set)<CR>

6.7.5 S – Set Offset

This command adds an offset value to the output of the transducer. See Section 6.7.2 on page 25 for more details.

INFORMATION **Proceed with caution when using this command.**
Do not use the H and S commands together.
Use one command and then assess the result before continuing.

Command: **<SPACE>S,<PIN>,<Pressure><CR>**

Reply: n/a

Result: The transducer stores the value set with the S command in non-volatile memory.

Query: **<SPACE>S,?<CR>**

Reply: <Off-set>,<Set-point><CR>

Query: **<SPACE>*S,?<CR>**

Reply: Offset = <Off-set><Units><CR>

Set At = <Set-point><Units><CR>

The transducer stores the value entered as <Set-point>. The H command also uses this set-point value. To remove the set-point send:

Command: **<SPACE>S,<PIN>,X<CR>**

Result: Clears the set-point value.

Copyright 2010 by Druck Limited.

6.7.6 W – Write Settings

This command writes the current settings into FLASH memory to preserve values through a power cycle.

Query: **<SPACE>W,<PIN><CR>**

Reply: OK<CR>

Result: The transducer stores settings in non-volatile memory.

Query: **<SPACE>*W,<PIN><CR>**

Reply: OK<CR>

6.8 Error Messages

Error messages are generated from the following sources:

6.8.1 Incorrect User Command

In a command string, the transducer accepts correct commands and rejects incorrect commands. An incorrect command causes the transducer to send an error message related to the command.

The form of the error message:

Reply: ERROR nn

Where nn is a decimal number, detailed in Table A-1 on page 31.

6.8.2 Transducer Fault

A transducer fault sends an error message blocking the transmission of pressure data and sending the fault message in place of data.

An applied pressure, 5% of span out of the calibrated range, causes:

Reply: *Over Pressure*

Reply: *Under Pressure*

A damaged transducer or no frequency output from the transducer causes:

Reply: **** NO RPT ****

Copyright 2010 by Druck Limited.

Copyright 2010 by Druck Limited.

Appendix A. Fault Finding

Table A-1: Fault Finding

Error Message	Probable cause	Action
!001 Buf Overflow	More than 64 characters sent without an end of the line character.	Send 64 delete characters followed by an end of line to clear the buffer.
!002 EEPROM Error	Failure of non-volatile memory.	Return to Druck for repair or replacement.
!004 Bad Command	Command character not recognized.	Check command string sent. Check the serial interface connection.
!005 Bad Char	Illegal character sent in a command string.	Check command string sent is valid. Check the serial interface connection.
!006 Bad Param(s)	Invalid parameters sent in command string - out of range, too long, wrong type etc.	Check command string sent.
!008 Bad Format	Invalid formatting character sent in command string or command is interactive.	Check command string sent requires a valid formatting character.
!009 Miss'g Param	At least one of the required parameters missing from command string.	Check command string sent.
!010 Invalid PIN	Incorrect PIN for the command sent.	Check command string sent.
!011 Bad Value	Out of range value sent to the transducer.	Send in range value.
!012 Bad BUS Cmd	Command sent to transducer in Network mode.	Send this command with transducer in Direct mode.
!013 Cal Error	Corrupt calibration data detected, transducer pressure measurement unreliable.	Return to Druck for recalibration.
!014 Press Range	Corrupt calibration data detected, pressure range not known, transducer pressure measurement unreliable.	Return to Druck for recalibration.
!015 Under Press	Pressure applied below calibrated limit.	Check for system fault where transducer is installed.
!016 Over Press	Pressure applied above calibrated limit.	Check for system fault where transducer is installed.
!017 Bad Global	Command sent to the transducer as a global 0: command not valid as a global command in network mode.	Send the command to each transducer in turn, using correct address in place of global 0.
!018 Bad Response	Invalid value entered in response to a prompt normally happens with inactive commands.	Repeat command with valid values in response to each prompt.
!019 Timed Out	Key not pressed in the specified time period (usually 20 seconds) normally happens with inactive commands.	Repeat command, entering response in less than 20 seconds between each character and send carriage return within the specified time.
!020 No Frequency	Change of measurement speed, see Section 6.6.3 on page 20.	Wait for 2 seconds, if fault remains return to Druck for repair or replacement.

Copyright 2010 by Druck Limited.

Table A-1: Fault Finding

Error Message	Probable cause	Action
!021 Bad Checksum	Error occurred in memory check sum.	Power cycle sensor, if fault remains return to Druck for repair or replacement.
!022 Bad Message	Erroneous character detected in the middle of a message.	Check and re-send message.
!023 Bad Cal Pres	Divide by zero error occurred in calibration calculation.	Check data and repeat calibration.

Copyright 2010 by Druck Limited.

Appendix B. RPS EEPROM Format

The EEPROM device in the RPS8#00 Series is a Microchip 11LC040. The data sheet can be downloaded from the Microchip website:

http://www.microchip.com

Only the first 511 bytes of memory are defined as follows:

Table B-1: EEPROM Format

Address (Dec)	Address (Hex)	Size (Bytes)	Field Name	Contents (Default)	Format
0	0000	1	Data field format code	1	8 bit Integer
2	0002	4	Serial Number		32-bit Integer
8	0008	16	Product ID Code	RPS8000	ASCII Text
40	0028	2	Transducer Type Identifier	&h 1F40	16 bit Integer
44	002C	1	Day of calibration - dd		8 bit Integer
45	002D	1	Month of calibration - mm		8 bit Integer
46	002E	1	Year of calibration - yy		8 bit Integer
52	0034	4	Customer Offset term	0	32 bit IEEE
56	0038	4	Customer Gain term	1	32 bit IEEE
64	0040	4	Upper pressure range		32 bit IEEE
68	0044	4	Lower pressure range		32 bit IEEE
72	0048	1	Pressure units code		8 bit Integer
73	0049	1	Sensor type Absolute/Gauge	0 / 1	8 bit Integer
80	0050	1	Number of pressure coefficients		8 bit Integer
81	0051	1	Number of temperature coefficients		8 bit Integer
128	0080	4	X - Frequency datum		32 bit IEEE
132	0084	4	Y - Temperature datum		32 bit IEEE
136	0088	4	K00		32 bit IEEE
140	008C	4	K01		32 bit IEEE
144	0090	4	K02		32 bit IEEE
148	0094	4	K03		32 bit IEEE
152	0098	4	K04		32 bit IEEE
156	009C	4	K10		32 bit IEEE
160	00A0	4	K11		32 bit IEEE
164	00A4	4	K12		32 bit IEEE
168	00A8	4	K13		32 bit IEEE

Copyright 2010 by Druck Limited.

Table B-1: EEPROM Format

Address (Dec)	Address (Hex)	Size (Bytes)	Field Name	Contents (Default)	Format
172	00AC	4	K14		32 bit IEEE
176	00B0	4	K20		32 bit IEEE
180	00B4	4	K21		32 bit IEEE
184	00B8	4	K22		32 bit IEEE
188	00BC	4	K23		32 bit IEEE
192	00C0	4	K24		32 bit IEEE
196	00C4	4	K30		32 bit IEEE
200	00C8	4	K31		32 bit IEEE
204	00CC	4	K32		32 bit IEEE
208	00D0	4	K33		32 bit IEEE
212	00D4	4	K34		32 bit IEEE
216	00D8	4	K40		32 bit IEEE
220	00DC	4	K41		32 bit IEEE
224	00E0	4	K42		32 bit IEEE
228	00E4	4	K43		32 bit IEEE
232	00E8	4	K44		32 bit IEEE
236	00EC	4	K50		32 bit IEEE
240	00F0	4	K51		32 bit IEEE
244	00F4	4	K52		32 bit IEEE
248	00F8	4	K53		32 bit IEEE
252	00FC	4	K54		32 bit IEEE
510	01FE	2	Checksum		16 bit Integer

Where the entries are in the following number formats:

Table B-2: Number Formats

Format	Description
8 bit Integer	Signed integer
16 bit Integer	Signed integer, MSB in lowest address
32 bit Integer	Signed integer, MSB in lowest address
ASCII Text	Series of ASCII characters
32 bit IEEE	4 byte IEEE-754 floating point number, lowest address holds sign and exponent, highest address holds LSB of mantissa.

Copyright 2010 by Druck Limited.

a. All unused locations below 01FE Hex are filled with zero.

b. All unused coefficients are populated with the value zero.

c. The check sum is calculated so that addition of all locations between 0 and 01FF Hex will sum to 1234 Hex.

The list of available values for 0048 Hex, pressure unit code are shown in Table B-3.

Table B-3: Pressure Unit Codes

Pressure Code	Units
0	Not defined
1	mbar
2	bar
3	hPa
4	kPa
5	MPa
6	psi
7	mmH_2O
8	inH_2O
9	ftH_2O
10	mH_2O
11	mmHg
12	inHg
13	kgf/cm^2
14	atm

Copyright 2010 by Druck Limited.

Copyright 2010 by Druck Limited.

Office Locations

druck.com/contact

Services and Support Locations

druck.com/service

Copyright 2010 by Druck Limited. ALL RIGHTS RESERVED. This material contains one or more registered trademarks of Druck Limited and/or its subsidiaries. All third-party products and company names are trademarks of their respective holders.

K0473 Revision F | English

druck.com

ICS Schneider Messtechnik GmbH
Briesestraße 59
D-16562 Hohen Neuendorf / OT Bergfelde

Tel.: 03303 / 50 40 66
Fax.: 03303 / 50 40 68

info@ics-schneider.de
www.ics-schneider.de