DPS5000

I²C-bus Pressure Transducer

Instruction Manual

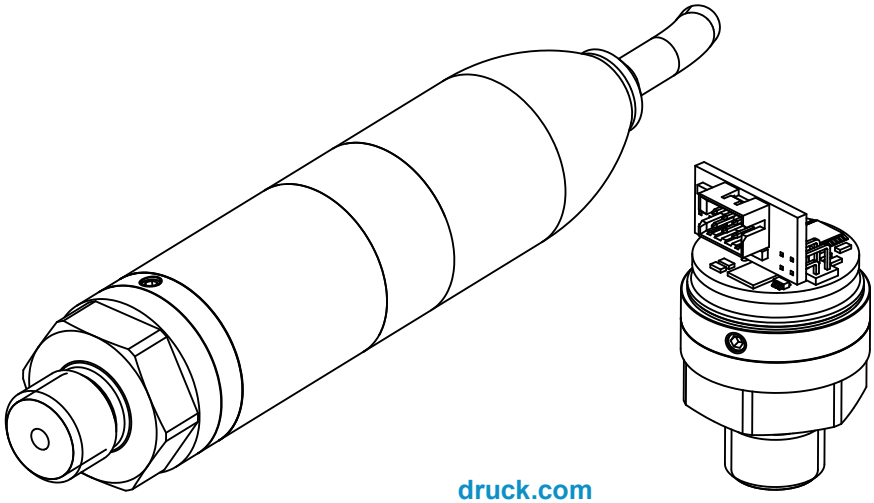

ICS Schneider Messtechnik GmbH
Briesestraße 59
D-16562 Hohen Neuendorf / OT Bergfelde

Tel.: 03303 / 50 40 66
Fax.: 03303 / 50 40 68

info@ics-schneider.de
www.ics-schneider.de

Safety

WARNING Do not use with media that has an oxygen concentration > 21 % or other strong oxidizing agents.

This product contains materials or fluids that may degrade or combust in the presence of strong oxidizing agents.

Do not apply pressure greater than the maximum safe working pressure to the sensor.

The manufacturer has designed this sensor to be safe when operated using the procedures detailed in this manual. Do not use this sensor for any other purpose than that stated.

This manual contains operating and safety instructions that must be followed for safe operation and to maintain the sensor in a safe condition. The safety instructions are either warnings or cautions issued to protect the user and the equipment from injury or damage.

Use qualified personnel and good engineering practice for all procedures in this manual. Qualified personnel must have the necessary technical knowledge, documentation, special test equipment and tools to carry out required work on this sensor.

Maintenance

The sensor must be maintained using the manufacturer's procedures and these should be carried out by authorized service agents or the manufacturer's service departments.

https://druck.com/service

Technical Advice

For technical advice contact the manufacturer.

Copyright 2015 by Druck Limited.

Symbols

Symbol	Description
CE	This equipment meets the requirements of all relevant European safety directives. The equipment carries the CE mark.
UK CA	This equipment meets the requirements of all relevant UK Statutory Instruments. The equipment carries the UKCA mark.
⚠	This symbol, on the equipment, indicates a warning and that the user should refer to the user manual.
	Druck is an active participant in the UK and EU Waste Electrical and Electronic Equipment (WEEE) take-back initiative (UK SI 2013/3113, EU directive 2012/19/EU). The equipment that you bought has required the extraction and use of natural resources for its production. It may contain hazardous substances that could impact health and the environment. In order to avoid the dissemination of those substances in our environment and to diminish the pressure on the natural resources, we encourage you to use the appropriate take-back systems. Those systems will reuse or recycle most of the materials of your end life equipment in a sound way. The crossed-out wheeled bin symbol invites you to use those systems. If you need more information on the collection, reuse, and recycling systems, please contact your local or regional waste administration. Please visit the link below for take-back instructions and more information about this initiative. **https://druck.com/weee**

Abbreviations

The following abbreviations are used in this manual.

Note: Abbreviations are the same in the singular and plural.

Abbreviation	Description
ADC	Analogue to digital converter
Addr	Address
ASCII	American standard code for information interchange
atm	atmosphere
ESD	Electro-static discharge
ftH_2O	Feet of water
hPa	HectoPascal

Copyright 2015 by Druck Limited.

Abbreviation	Description
Hz	Hertz
I^2C	Inter-integrated circuit
IEEE	Institute of Electrical and Electronic Engineers
inHg	Inch of Mercury
inH_2O	Inch of water
kbit/s	Kilobits per second
kbyte	Kilobytes (1024 bytes)
kgf/cm^2	Kilogram-force per square centimetre
kPa	KiloPascal
LSB	Least significant bit/byte
mbar	Millibar
mH_2O	Metre of water
mmHg	Millimetre of Mercury
mmH_2O	Millimetre of water
MPa	MegaPascal
ms	Millisecond
MSB	Most significant bit/byte
PCB	Printed circuit board
psi	Pound per square inch
s	Second
SNR	Signal to noise ratio
°C	Degrees Celsius

Nomenclature

The following number notations are used in this document.

Nomenclature	Description
0bn..n	Binary number notation, e.g. 0b10
0xn..n	Hexadecimal number notation, e.g. 0x3BF0

Data Types

The following data types are used in this document.

Type	Bits	Range
Unsigned byte	8	0x00 (0) to 0xFF (255)
Unsigned integer	16	0x0000 (0) to 0xFFFF (65535)

Copyright 2015 by Druck Limited.

Type	Bits	Range
Unsigned word	32	0x00000000 (0) to 0xFFFFFFFF (4294967295)
Float[a]	32	0xFF7FFFFF (-3.4028E-38) to 0x7F7FFFFF (+3.4028E+38)
Extended ASCII[b]	8	0x00 (NULL) to 0xFF (ÿ)

a. Data type float to IEEE 754.
b. Data type Extended ASCII to ISO 8859-1.

References

Reference	Description
1	I^2C-bus specification and user manual, NPX Semiconductor UM10204 Rev. 7 available from www.nxp.com.

Copyright 2015 by Druck Limited.

Contents

1. Introduction 1
   1.1 General 1
   1.2 Configuration 1

2. Installation 2
   2.1 General 2
   2.2 Mounting and Orientation 2
   2.3 Connecting to the Pressure Source 2
   2.4 Electrical Connections 3

3. Functional Description 4
   3.1 Sensor Communication 4
   3.2 Memory Map 5
   3.3 Register Descriptions 6
      3.3.1 Register Bit Table Legend 6
      3.3.2 Address 0 – STATUS 7
      3.3.3 Address 1 – COMP_PRES 9
      3.3.4 Address 2 – COMP_TEMP 10
      3.3.5 Address 3 – ADC_PRES 11
      3.3.6 Address 4 – ADC_TEMP 12
      3.3.7 Address 5 – ACCESS 13
      3.3.8 Address 6 – MVOLT_PRES 14
      3.3.9 Address 7 – MVOLT_TEMP 15
      3.3.10 Address 66 – I2C_ADDR 16
      3.3.11 Address 67 – COEF_FIT 17
      3.3.12 Address 68 – GAIN_ADJ 18
      3.3.13 Address 69 – OFFSET_ADJ 19
      3.3.14 Address 70 – MAX_RANGE 20
      3.3.15 Address 71 – MIN_RANGE 21
      3.3.16 Address 72 – CAL_DATE 22
      3.3.17 Address 73 – MAX_ADC_PRES 23
      3.3.18 Address 74 – MIN_ADC_PRES 24
      3.3.19 Address 75 – MAX_ADC_TEMP 25
      3.3.20 Address 76 – MIN_ADC_TEMP 26
      3.3.21 Address 77 – SERIAL 27
      3.3.22 Address 78 – CONFIG 28
      3.3.23 Address 79 – VERSION 29
      3.3.24 Address 82 – AVERAGE 30
      3.3.25 Address 83 – PRES_CONV 31
      3.3.26 Address 84 – PRES_UNIT 32
      3.3.27 Address 85 – DELAY 33
      3.3.28 Address 86 – SPEC_DWG 34
      3.3.29 Address 87 – TARE_VALUE 35
      3.3.30 Addresses 128–157 – Pressure Coefficients 36
      3.3.31 Addresses 158–187 – Temperature Coefficients 37

4. Operational Description 37
   4.1 Operational States 37
   4.2 Reading the Pressure and Temperature 38

Copyright 2015 by Druck Limited.

4.3 Updating the Pressure and Temperature 38
4.3.1 Manual Update 38
4.3.2 Automatic Update 39
4.4 Updating the Sensor Configuration Data Registers 39
4.4.1 User Modifiable Registers 39
4.4.2 Modifying the I²C-bus Address 40
4.4.3 Changing the Auto-Update Period 40
4.4.4 Changing the Unit of Pressure 41
4.4.5 Reading Relative Pressure 41
4.4.6 Pressure and Temperature SNR 42
4.4.7 Maximizing the Update Rate 43
4.4.8 Pressure Re-calibration 43

5. Maintenance 44
5.1 Cleaning 44
5.2 Adjustment 44
5.3 Repair 44
5.4 Disposal 44

Appendix A. Unit of Pressure Conversion Factors 45

Copyright 2015 by Druck Limited.

Figures

Figure		Page
1	External and Internal DPS5000 Sensors – General View	1
2	Pressure Connection	2
3	Typical I^2C-bus Network	3
4	Typical I^2C-bus Data Transfers	4
5	Bit Table Legend	6
6	Operational States	37
7	Interaction Legend	38
8	Noise Level Correction Factors	42

Copyright 2015 by Druck Limited.

Copyright 2015 by Druck Limited.

Tables

Table		Page
1	Electrical Connections	3
2	I^2C-bus Feature Support	4
3	Memory Map – Volatile Data	5
4	Memory Map – Configuration Data	5
5	Memory Map – Coefficient Data	6
6	Bit Types	6
7	Bit Status after Reset	6
8	User Modifiable Registers	39

Copyright 2015 by Druck Limited.

Copyright 2015 by Druck Limited.

1. Introduction

1.1 General

The DPS5000 series sensor is a microcontroller based smart pressure transducer that provides a digital output through an I^2C-bus interface. The sensor is available as either an external or internal variant. The external variant is a sealed device with the electrical connections made via an integral cable. The internal variant is an open frame device with electrical connections made via an integral plug.

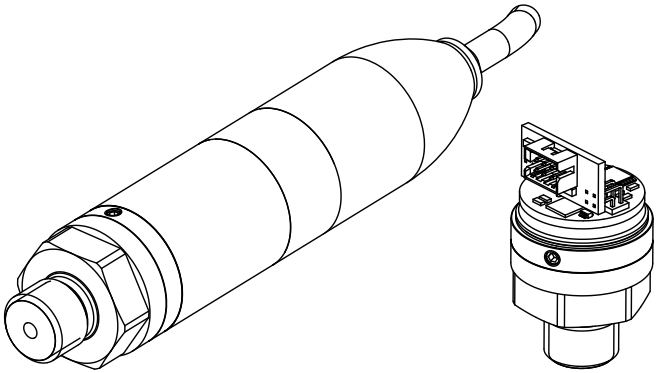

Figure 1: External and Internal DPS5000 Sensors – General View

The DPS5000 series sensors are low powered devices offering a high level of accuracy over a wide temperature range. The I^2C-bus interface provides compensated pressure and temperature readings and allows the sensor operation to be software controlled.

1.2 Configuration

The following options are available at the time of ordering:

a. External or internal sensor variant.

b. Pressure range.

c. Pressure connector.

Each sensor is supplied with the following documentation:

a. Hazardous area installation instructions[1]:

- Document K0546 for the external sensor variant.
- Document K0547 for the internal sensor variant.

b. Calibration certificate.

1. Only supplied with hazardous area certified sensors.

Copyright 2015 by Druck Limited.

2. Installation

WARNING **Do not interchange sensors between an oil system and a system that uses fuel or gas. This can cause an explosion resulting in death or injury and/or damage to equipment.**

High pressures and extremes of temperature are dangerous. De-pressurize and allow components to attain an acceptable temperature in systems where high pressures and high or low temperatures are present.

ELECTROSTATIC SENSITIVE DEVICES **The sensor contains ESD sensitive devices. Whilst the sensor incorporates protection against ESD, caution should be taken to observe proper ESD handling procedures when installing the internal variant.**

2.1 General

Before installing the DPS5000 series sensor:

1. Ensure that the sensor is the correct type for the application and will not be subject to pressures or media outside those specified on the applicable datasheet or specification drawing.
2. If the sensor is being installed in a hazardous area observe the installation instructions given in the supplied document K0546 or K0547.
3. Read all relevant instructions and procedures in the applicable system installation manual.

To prevent contamination prior to installation, keep the sensor in the original packaging with all the supplied covers fitted.

When installing the internal variant, to prevent possible damage, avoid touching or applying excessive force to the exposed PCB assemblies.

2.2 Mounting and Orientation

The DPS5000 series sensors are designed to be mounted in any orientation. However, the sensor is a harsh media isolated product and the isolation is achieved by hermetically sealing the sensor chip within an oil filled chamber. The weight of the oil gives a g-sensitivity as a pressure offset error that may be noticeable at the lowest pressure ranges.

Ensure the sensor is mounted in a manner that avoids unwanted mechanical or thermal stress such as vibration, shock or excessive or rapid temperatures excursions.

2.3 Connecting to the Pressure Source

When connecting the pressure source to the sensor, ensure the mating surfaces are correctly sealed. Failure to properly seal may affect the sensor performance or calibration accuracy.

Male parallel threaded pressure connectors must not be sealed or constrained against the face at the base of the thread. The forward flat face should be used as shown in Figure 2.

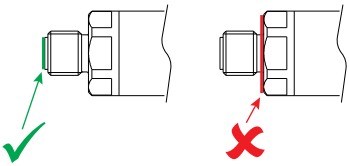

Figure 2: Pressure Connection

Torque tighten the sensor in accordance with the system installation manual.

Copyright 2015 by Druck Limited.

2.4 Electrical Connections

CAUTION The DPS5000 is intended for use within networks operated from a single supply at a voltage within the range 2.7 V to 3.6 V. Operation outside these limits is not guaranteed and may damage the sensor.

The sensor interface includes two reserved signals. These should be left open circuit as connecting to these signals may result in incorrect sensor operation.

INFORMATION Due to the low power consumption of the DPS5000 sensors, the I²C-bus pull-up resistors may provide sufficient power to maintain the sensor in the standby state when the I²C-bus Supply + line is disconnected from the sensor. To ensure the sensor is correctly powered down, disconnect the sensor completely from the I²C-bus or turn off the I²C-bus network power supply.

The DPS5000 series sensors employ a 4-wire I²C-bus user electrical interface:

- Supply +
- Serial data (SDA)
- Serial clock (SCL)
- Supply –

The sensor may be used standalone or as part of a network of compatible I²C-bus devices.

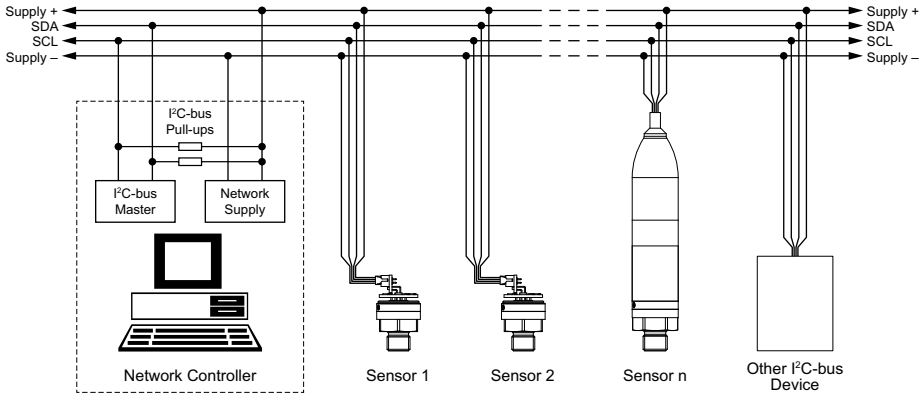

Figure 3: Typical I²C-bus Network

The electrical connections to the sensors are color coded as shown in Table 1.

Table 1: Electrical Connections

Signal	External Variant	Internal Variant	Plug Pin[a]
Supply +	Red	Red	1
Serial data	Orange	Yellow	2
Serial clock	Black	Green	3
Supply –	White	Blue	4
Reserved	Yellow & Blue	Orange & Black	5 & 6
Case	Screen	–	–

Copyright 2015 by Druck Limited.

a. The mating connector for the internal variant plug is a Molex Milli-Grid™ connector system 6-pin crimp housing part number 0511100660 with crimp terminals part number 0503948051 or 0503948100.

3. Functional Description

3.1 Sensor Communication

The DPS5000 series sensors appear on the I²C-bus as a slave device containing a number of memory mapped registers that are used to control the operation of the sensor and to provide information about the sensor and its environment. Table 2 summarizes the features of the I²C-bus specification, refer to “References”, that are supported by the DPS5000 series sensors.

Table 2: I²C-bus Feature Support

Feature	Supported
Standard Mode	●
Fast Mode	
Fast Mode Plus	
High Speed Mode	
7-bit Addressing	●
10-bit Addressing	
General Call Address	
Clock Stretching	●
Software Reset	
Device ID	

Each slave device on an I²C-bus network must have a unique address. The default address for the DPS5000 series sensors is 2, but may be changed over the bus as required to any value within the range 1 to 127.

The DPS5000 series sensors support the I²C-bus standard mode, permitting data transfers to or from the sensor at up to 100 kbit/s under the control of the network I²C-bus master. Data transfers may use any of the three I²C-bus data transfer formats to achieve the sensor register read and write protocols, as shown in Figure 4. Repeat start is also permitted.

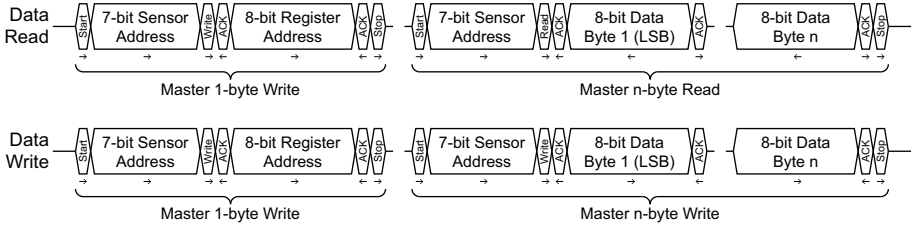

Figure 4: Typical I²C-bus Data Transfers

When reading from or writing to the sensor, the master first performs a 1-byte data write to send the required register address to the sensor. The master then performs either an n-byte data read or write to transfer the data, LSB first, from or to the addressed register. As the sensor registers are 32 bits wide, the read and write transfers are generally 4 bytes long. However, 1, 2 or 3-byte transfers are allowed.

Copyright 2015 by Druck Limited.

3.2 Memory Map

The DPS5000 sensor registers are mapped within a 1 kbyte memory space. As each register is 4 bytes wide, the register addresses range from 0 to 255. Not all the address space is available to the user, some addresses are reserved whilst others are unused. The reserved addresses cannot be written to and read as 0x00000000. Unused addresses cannot be written to and read as 0xFFFFFFFF.

The registers are grouped into three blocks: volatile data, configuration data and coefficient data as shown in Table 3.

Table 3: Memory Map – Volatile Data

Address	Register
0	STATUS
1	COMP_PRES
2	COMP_TEMP
3	ADC_PRES
4	ADC_TEMP
5	ACCESS
6	MVOLT_PRES
7	MVOLT_TEMP
8…63	Reserved

Table 4: Memory Map – Configuration Data

Address	Register
64…65	Reserved
66	I2C_ADDR
67	COEF_FIT
68	GAIN_ADJ
69	OFFSET_ADJ
70	MAX_RANGE
71	MIN_RANGE
72	CAL_DATE
73	MAX_ADC_PRES
74	MIN_ADC_PRES
75	MAX_ADC_TEMP
76	MIN_ADC_TEMP
77	SERIAL
78	CONFIG
79	VERSION
80…81	Reserved

Copyright 2015 by Druck Limited.

Table 4: Memory Map – Configuration Data

Address	Register
82	AVERAGE
83	PRES_CONV
84	PRES_UNIT
85	DELAY
86	SPEC_DWG
87	TARE_VALUE
88…127	Reserved

Table 5: Memory Map – Coefficient Data

Address	Register
128…157	Up to 30 pressure coefficient registers.
158…187	Up to 30 temperature coefficient registers.
188…255	Unused

3.3 Register Descriptions

3.3.1 Register Bit Table Legend

The legend used for the bit tables within this section is shown in Figure 5.

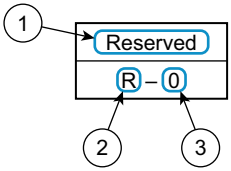

1 Bit field name.
2 Bit type.
3 Bit status after reset.

Figure 5: Bit Table Legend

Table 6: Bit Types

Bit Type	Description
R	Read only, writes have no effect.
W	Write only, always reads as 0.
R/W	Read and writable.

Table 7: Bit Status after Reset

Bit Status	Description
0	Bit cleared.
1	Bit set.
X	Bit unknown or may change.

Copyright 2015 by Druck Limited.

Not all bits within a register are available to the user. Reserved bits always read as 0b0 and writes have no effect. Unused bits are readable and writable but have no effect on the sensor operation.

3.3.2 Address 0 – STATUS

Bit 31	Bit 30	Bit 29	Bit 28	Bit 27	Bit 26	Bit 25	Bit 24
Reserved	Reserved	Reserved	Reserved	Reserved	Reserved	Reserved	Reserved
R–0	R–0	R–0	R–0	R–0	R–0	R–0	R–0

Bit 23	Bit 22	Bit 21	Bit 20	Bit 19	Bit 18	Bit 17	Bit 16
Reserved	Reserved	Reserved	Reserved	Reserved	Reserved	Reserved	Reserved
R–0	R–0	R–0	R–0	R–0	R–0	R–0	R–0

Bit 15	Bit 14	Bit 13	Bit 12	Bit 11	Bit 10	Bit 9	Bit 8
RESET [1..0]		CLRQERR	TARE	SET_TARE	QERR	INTRDG	AUTO
W–0	W–0	W–0	R/W–0	W–0	R–0	RW–0	R/W–0

Bit 7	Bit 6	Bit 5	Bit 4	Bit 3	Bit 2	Bit 1	Bit 0
Reserved	Reserved	WRITE	ADC_ON	WENB	VALID [1..0]		CONV
R–0	R–0	W–0	R–X	R–0	R–X	R–X	R/W–X

Bit	Description
Bit 31–16	Reserved, read as 0
Bit 15–14	RESET [1..0]: Write only – performs a sensor reset equivalent to cycling the sensor power. 0b00 No action 0b01 No action 0b10 Reset 0b11 No action
Bit 13	CLRQERR: Write only – used to clear the QERR (bit 10) and the CONV (bit 0) flags. 0b0 No action 0b1 Clear flags
Bit 12	TARE: Read/write – used to enable the sensor tare mode. When enabled, the COMP_PRES register (address 1) is set to the actual compensated pressure minus the current value of the TARE_VALUE register (address 87). 0b0 Disabled 0b1 Enabled
Bit 11	SET_TARE: Write only – used to copy the current value of the COMP_PRES register (address 1) to the TARE_VALUE register (address 87). 0b0 No action 0b1 Copy data

Copyright 2015 by Druck Limited.

Bit	Description
Bit 10	QERR: Read only – set when an internal queue error is detected whilst AUTO (bit 8) is set. Reset using CLRQERR (bit 13). 0b0 No error 0b1 Error
Bit 9	INTRDG: Read/write – used to enable the sensor interleave mode. ADC_ON (bit 4) is always set when enabled, and alternate pressure and temperature ADC values are used to generate the updated pressure and temperature readings. 0b0 Disabled 0b1 Enabled
Bit 8	AUTO: Read/write – used to enable the sensor auto-update mode. When enabled pressure and temperature readings are updated automatically at a rate determined by the value of the DELAY register (address 85). 0b0 Disabled 0b1 Enabled
Bit 7–6	Reserved, read as 0
Bit 5	WRITE: Write only – used to transfer the current values of the configuration data registers to non-volatile memory when WENB (bit 3) is set. 0b0 No action 0b1 Transfer data
Bit 4	ADC_ON: Read only – indicates when the sensor ADC and bridge are active. 0b0 Inactive 0b1 Active
Bit 3	WENB: Read only – indicates the write status of the configuration data resisters. It is set and cleared by writing to the ACCESS register (address 5). 0b0 Not writable 0b1 Writable
Bit 2–1	VALID [1..0]: Read only – used to indicate the status of the current values held in the COMP_PRES and COMP_TEMP registers (addresses 1 and 2). Automatically cleared by reading the COMP_PRES, COMP_TEMP, ADC_PRES, ADC_TEMP, MVOLT_PRES or MVOLT_TEMP register (addresses 1, 2, 3, 4, 6 and 7 respectively) whilst the sensor is in the auto-update mode. 0b00 Error – invalid pressure and temperature ADC values detected 0b01 Error – invalid temperature ADC value detected 0b10 Error – invalid pressure ADC value detected 0b11 Data valid
Bit 0	CONV: Read/write – used to trigger an update of the COMP_PRES and COMP_TEMP registers (addresses 1 and 2) and to indicate when the registers have been updated. Cleared by writing 0b0, using CLRQERR (bit 13) or by reading the COMP_PRES, COMP_TEMP, ADC_PRES, ADC_TEMP, MVOLT_PRES or MVOLT_TEMP register (addresses 1, 2, 3, 4, 6 and 7 respectively) whilst the sensor is in the auto-update mode. 0b0 Read = data not updated / Write = clear bit 0b1 Read = data updated / Write = request update

Copyright 2015 by Druck Limited.

3.3.3 Address 1 – COMP_PRES

Bit 31	Bit 30	Bit 29	Bit 28	Bit 27	Bit 26	Bit 25	Bit 24
COMP_PRES [31..24]							
R–X							

Bit 23	Bit 22	Bit 21	Bit 20	Bit 19	Bit 18	Bit 17	Bit 16
COMP_PRES [23..16]							
R–X							

Bit 15	Bit 14	Bit 13	Bit 12	Bit 11	Bit 10	Bit 9	Bit 8
COMP_PRES [15..8]							
R–X							

Bit 7	Bit 6	Bit 5	Bit 4	Bit 3	Bit 2	Bit 1	Bit 0
COMP_PRES [7..0]							
R–X							

Bit	Description
Bit 31–0	COMP_PRES [31..0]: Read only – the most recently updated compensated pressure value in the pressure units defined by the PRES_UNIT register (address 84). Reading this register whilst the sensor is in the auto-update mode will clear the CONV (bit 0) flag of the STATUS register (address 0). 0xn..n Number type float

Copyright 2015 by Druck Limited.

3.3.4 Address 2 – COMP_TEMP

Bit 31	Bit 30	Bit 29	Bit 28	Bit 27	Bit 26	Bit 25	Bit 24
COMP_TEMP [31..24]							
R–X							

Bit 23	Bit 22	Bit 21	Bit 20	Bit 19	Bit 18	Bit 17	Bit 16
COMP_TEMP [23..16]							
R–X							

Bit 15	Bit 14	Bit 13	Bit 12	Bit 11	Bit 10	Bit 9	Bit 8
COMP_TEMP [15..8]							
R–X							

Bit 7	Bit 6	Bit 5	Bit 4	Bit 3	Bit 2	Bit 1	Bit 0
COMP_TEMP [7..0]							
R–X							

Bit	Description
Bit 31–0	COMP_TEMP [31..0]: Read only – the most recently updated compensated temperature value in °C. Reading this register whilst the sensor is in the auto-update mode will clear the CONV (bit 0) flag of the STATUS register (address 0). 0xn..n Number type float

Copyright 2015 by Druck Limited.

3.3.5 Address 3 – ADC_PRES

Bit 31	Bit 30	Bit 29	Bit 28	Bit 27	Bit 26	Bit 25	Bit 24
ADC_PRES [31..24]							
R–X							

Bit 23	Bit 22	Bit 21	Bit 20	Bit 19	Bit 18	Bit 17	Bit 16
ADC_PRES [23..16]							
R–X							

Bit 15	Bit 14	Bit 13	Bit 12	Bit 11	Bit 10	Bit 9	Bit 8
ADC_PRES [15..8]							
R–X							

Bit 7	Bit 6	Bit 5	Bit 4	Bit 3	Bit 2	Bit 1	Bit 0
ADC_PRES [7..0]							
R–X							

Bit	Description
Bit 31–0	ADC_PRES [31..0]: Read only – the most recently updated pressure ADC value. This value is used to calculate the value held in the MVOLT_PRES register (address 6). Reading this register whilst the sensor is in the auto-update mode will clear the CONV (bit 0) flag of the STATUS register (address 0). 0xn..n Number type unsigned word

Copyright 2015 by Druck Limited.

3.3.6 Address 4 – ADC_TEMP

Bit 31	Bit 30	Bit 29	Bit 28	Bit 27	Bit 26	Bit 25	Bit 24
ADC_TEMP [31..24]							
R–X							

Bit 23	Bit 22	Bit 21	Bit 20	Bit 19	Bit 18	Bit 17	Bit 16
ADC_TEMP [23..16]							
R–X							

Bit 15	Bit 14	Bit 13	Bit 12	Bit 11	Bit 10	Bit 9	Bit 8
ADC_TEMP [15..8]							
R–X							

Bit 7	Bit 6	Bit 5	Bit 4	Bit 3	Bit 2	Bit 1	Bit 0
ADC_TEMP [7..0]							
R–X							

Bit	Description
Bit 31–0	ADC_TEMP [31..0]: Read only – the most recently updated temperature ADC value. This value is used to calculate the value held in the MVOLT_TEMP register (address 7). Reading this register whilst the sensor is in the auto-update mode will clear the CONV (bit 0) flag of the STATUS register (address 0). 0xn..n Number type unsigned word

Copyright 2015 by Druck Limited.

3.3.7 Address 5 – ACCESS

Bit 31	Bit 30	Bit 29	Bit 28	Bit 27	Bit 26	Bit 25	Bit 24
ACCESS [31..24]							
W–0							

Bit 23	Bit 22	Bit 21	Bit 20	Bit 19	Bit 18	Bit 17	Bit 16
ACCESS [23..16]							
W–0							

Bit 15	Bit 14	Bit 13	Bit 12	Bit 11	Bit 10	Bit 9	Bit 8
ACCESS [15..8]							
W–0							

Bit 7	Bit 6	Bit 5	Bit 4	Bit 3	Bit 2	Bit 1	Bit 0
ACCESS [7..0]							
W–0							

Bit	Description		
Bit 31–0	ACCESS [31..0]: Write only – used to clear or set WENB (bit 3) of the STATUS register (address 0).		
	0xn..n	Number type unsigned word	
		0	Clear WENB
		4118	Set WENB

Copyright 2015 by Druck Limited.

3.3.8 Address 6 – MVOLT_PRES

Bit 31	Bit 30	Bit 29	Bit 28	Bit 27	Bit 26	Bit 25	Bit 24
MVOLT_PRES [31..24]							
R–X							

Bit 23	Bit 22	Bit 21	Bit 20	Bit 19	Bit 18	Bit 17	Bit 16
MVOLT_PRES [23..16]							
R–X							

Bit 15	Bit 14	Bit 13	Bit 12	Bit 11	Bit 10	Bit 9	Bit 8
MVOLT_PRES [15..8]							
R–X							

Bit 7	Bit 6	Bit 5	Bit 4	Bit 3	Bit 2	Bit 1	Bit 0
MVOLT_PRES [7..0]							
R–X							

Bit	Description
Bit 31–0	MVOLT_PRES [31..0]: Read only – the most recently updated pressure sensing element output voltage. This value is used in conjunction with the pressure and temperature coefficient registers to calculate the values held in the COMP_PRES and COMP_TEMP registers (addresses 1 and 2). Reading this register whilst the sensor is in the auto-update mode will clear the CONV (bit 0) flag of the STATUS register (address 0). 0xn..n Number type float

Copyright 2015 by Druck Limited.

3.3.9 Address 7 – MVOLT_TEMP

Bit 31	Bit 30	Bit 29	Bit 28	Bit 27	Bit 26	Bit 25	Bit 24
MVOLT_TEMP [31..24]							
R–X							

Bit 23	Bit 22	Bit 21	Bit 20	Bit 19	Bit 18	Bit 17	Bit 16
MVOLT_TEMP [23..16]							
R–X							

Bit 15	Bit 14	Bit 13	Bit 12	Bit 11	Bit 10	Bit 9	Bit 8
MVOLT_TEMP [15..8]							
R–X							

Bit 7	Bit 6	Bit 5	Bit 4	Bit 3	Bit 2	Bit 1	Bit 0
MVOLT_TEMP [7..0]							
R–X							

Bit	Description
Bit 31–0	MVOLT_TEMP [31..0]: Read only – the most recently updated temperature sensing element output voltage. This value is used in conjunction with the pressure and temperature coefficient registers to calculate the values held in the COMP_PRES and COMP_TEMP registers (addresses 1 and 2). Reading this register whilst the sensor is in the auto-update mode will clear the CONV (bit 0) flag of the STATUS register (address 0). 0xn..n Number type float

Copyright 2015 by Druck Limited.

3.3.10 Address 66 – I2C_ADDR

Bit 31	Bit 30	Bit 29	Bit 28	Bit 27	Bit 26	Bit 25	Bit 24
Unused	Unused	Unused	Unused	Unused	Unused	Unused	Unused
R/W–X	R/W–X	R/W–X	R/W–X	R/W–X	R/W–X	R/W–X	R/W–X

Bit 23	Bit 22	Bit 21	Bit 20	Bit 19	Bit 18	Bit 17	Bit 16
Unused	Unused	Unused	Unused	Unused	Unused	Unused	Unused
R/W–X	R/W–X	R/W–X	R/W–X	R/W–X	R/W–X	R/W–X	R/W–X

Bit 15	Bit 14	Bit 13	Bit 12	Bit 11	Bit 10	Bit 9	Bit 8
Unused	Unused	Unused	Unused	Unused	Unused	Unused	Unused
R/W–X	R/W–X	R/W–X	R/W–X	R/W–X	R/W–X	R/W–X	R/W–X

Bit 7	Bit 6	Bit 5	Bit 4	Bit 3	Bit 2	Bit 1	Bit 0
ADDR [7..0]							
R/W–X							

Bit	Description		
Bit 31–8	Unused, read/write		
Bit 7–0	ADDR [7..0]: Read/write – the sensors current/new I²C-bus address[a].		
	0xn..n	Number type unsigned byte	
		0	Invalid address[b]
		1	Valid address
		2	Valid address – default value
		3…127	Valid address
		128…255	Invalid address[b]

a. A change of the sensor I²C-bus address does not take effect until the I2C_ADDR register has been modified, written to non-volatile memory and the sensor reset via the STATUS register or the sensor power is cycled.
b. Invalid addresses default to 2 when the sensor is reset.

Copyright 2015 by Druck Limited.

3.3.11 Address 67 – COEF_FIT

Bit 31	Bit 30	Bit 29	Bit 28	Bit 27	Bit 26	Bit 25	Bit 24
TT_FIT [7..0]							
R–X							

Bit 23	Bit 22	Bit 21	Bit 20	Bit 19	Bit 18	Bit 17	Bit 16
TP_FIT [7..0]							
R–X							

Bit 15	Bit 14	Bit 13	Bit 12	Bit 11	Bit 10	Bit 9	Bit 8
PT_FIT [7..0]							
R–X							

Bit 7	Bit 6	Bit 5	Bit 4	Bit 3	Bit 2	Bit 1	Bit 0
PP_FIT [7..0]							
R–X							

Bit	Description
Bit 31–24	TT_FIT [7..0]: Read only – the number of temperature-related temperature coefficients equal this value + 1. 0xn..n Number type unsigned byte
Bit 23–16	TP_FIT [7..0]: Read only – the number of pressure-related temperature coefficients equal this value + 1. 0xn..n Number type unsigned byte
Bit 15–8	PT_FIT [7..0]: Read only – the number of temperature-related pressure coefficients equal this value + 1. 0xn..n Number type unsigned byte
Bit 7–0	PP_FIT [7..0]: Read only – the number of pressure-related pressure coefficients equal this value + 1. 0xn..n Number type unsigned byte

Copyright 2015 by Druck Limited.

3.3.12 Address 68 – GAIN_ADJ

Bit 31	Bit 30	Bit 29	Bit 28	Bit 27	Bit 26	Bit 25	Bit 24
GAIN_ADJ [31..24]							
R/W–X							

Bit 23	Bit 22	Bit 21	Bit 20	Bit 19	Bit 18	Bit 17	Bit 16
GAIN_ADJ [23..16]							
R/W–X							

Bit 15	Bit 14	Bit 13	Bit 12	Bit 11	Bit 10	Bit 9	Bit 8
GAIN_ADJ [15..8]							
R/W–X							

Bit 7	Bit 6	Bit 5	Bit 4	Bit 3	Bit 2	Bit 1	Bit 0
GAIN_ADJ [7..0]							
R/W–X							

Bit	Description
Bit 31–0	GAIN_ADJ [31..0]: Read/write – the value of this register is used to modify the value of the COMP_PRES register (address 1). It is used in conjunction with the OFFSET_ADJ register (address 69) during user re-calibration of the sensor. 0xn..n Number type float 1.0 Default value

Copyright 2015 by Druck Limited.

3.3.13 Address 69 – OFFSET_ADJ

Bit 31	Bit 30	Bit 29	Bit 28	Bit 27	Bit 26	Bit 25	Bit 24
OFFSET_ADJ [31..24]							
R/W–X							

Bit 23	Bit 22	Bit 21	Bit 20	Bit 19	Bit 18	Bit 17	Bit 16
OFFSET_ADJ [23..16]							
R/W–X							

Bit 15	Bit 14	Bit 13	Bit 12	Bit 11	Bit 10	Bit 9	Bit 8
OFFSET_ADJ [15..8]							
R/W–X							

Bit 7	Bit 6	Bit 5	Bit 4	Bit 3	Bit 2	Bit 1	Bit 0
OFFSET_ADJ [7..0]							
R/W–X							

Bit	Description
Bit 31–0	OFFSET_ADJ [31..0]: Read/write – the value of this register is used to modify the value of the COMP_PRES register (address 1). It is used in conjunction with the GAIN_ADJ register (address 68) during user re-calibration of the sensor. 0xn..n Number type float 0.0 Default value

Copyright 2015 by Druck Limited.

3.3.14 Address 70 – MAX_RANGE

Bit 31	Bit 30	Bit 29	Bit 28	Bit 27	Bit 26	Bit 25	Bit 24
MAX_RANGE [31..24]							
R–X							

Bit 23	Bit 22	Bit 21	Bit 20	Bit 19	Bit 18	Bit 17	Bit 16
MAX_RANGE [23..16]							
R–X							

Bit 15	Bit 14	Bit 13	Bit 12	Bit 11	Bit 10	Bit 9	Bit 8
MAX_RANGE [15..8]							
R–X							

Bit 7	Bit 6	Bit 5	Bit 4	Bit 3	Bit 2	Bit 1	Bit 0
MAX_RANGE [7..0]							
R–X							

Bit	Description
Bit 31–0	MAX_RANGE [31..0]: Read only – the upper limit of the sensor pressure range in the pressure units defined by the PRES_UNIT register (address 84). 0xn..n Number type float

Copyright 2015 by Druck Limited.

3.3.15 Address 71 – MIN_RANGE

Bit 31	Bit 30	Bit 29	Bit 28	Bit 27	Bit 26	Bit 25	Bit 24
MIN_RANGE [31..24]							
R–X							

Bit 23	Bit 22	Bit 21	Bit 20	Bit 19	Bit 18	Bit 17	Bit 16
MIN_RANGE [23..16]							
R–X							

Bit 15	Bit 14	Bit 13	Bit 12	Bit 11	Bit 10	Bit 9	Bit 8
MIN_RANGE [15..8]							
R–X							

Bit 7	Bit 6	Bit 5	Bit 4	Bit 3	Bit 2	Bit 1	Bit 0
MIN_RANGE [7..0]							
R–X							

Bit	Description
Bit 31–0	MIN_RANGE [31..0]: Read only – the lower limit of the sensor pressure range in the pressure units defined by the PRES_UNIT register (address 84). 0xn..n Number type float

Copyright 2015 by Druck Limited.

3.3.16 Address 72 – CAL_DATE

Bit 31	Bit 30	Bit 29	Bit 28	Bit 27	Bit 26	Bit 25	Bit 24
YEAR [15..8]							
R/W–X							

Bit 23	Bit 22	Bit 21	Bit 20	Bit 19	Bit 18	Bit 17	Bit 16
YEAR [7..0]							
R/W–X							

Bit 15	Bit 14	Bit 13	Bit 12	Bit 11	Bit 10	Bit 9	Bit 8
MONTH [7..0]							
R/W–X							

Bit 7	Bit 6	Bit 5	Bit 4	Bit 3	Bit 2	Bit 1	Bit 0
DAY [7..0]							
R/W–X							

Bit	Description
Bit 31–16	YEAR [15..0]: Read/write – the year in which the sensor was calibrated. This value may be updated by the user following re-calibration of the sensor. 0xn..n Number type unsigned integer[a]
Bit 15–8	MONTH [7..0]: Read/write – the month in which the sensor was calibrated. This value may be updated by the user following re-calibration of the sensor. 0xn..n Number type unsigned byte[a]
Bit 7–0	DAY [7..0]: Read/write – the day on which the sensor was calibrated. This value may be updated by the user following re-calibration of the sensor. 0xn..n Number type unsigned byte[a]

a. All values of the specified number type are supported which may result in nonsensical date values.

Copyright 2015 by Druck Limited.

3.3.17 Address 73 – MAX_ADC_PRES

Bit 31	Bit 30	Bit 29	Bit 28	Bit 27	Bit 26	Bit 25	Bit 24
MAX_ADC_PRES [31..24]							
R–X							

Bit 23	Bit 22	Bit 21	Bit 20	Bit 19	Bit 18	Bit 17	Bit 16
MAX_ADC_PRES [23..16]							
R–X							

Bit 15	Bit 14	Bit 13	Bit 12	Bit 11	Bit 10	Bit 9	Bit 8
MAX_ADC_PRES [15..8]							
R–X							

Bit 7	Bit 6	Bit 5	Bit 4	Bit 3	Bit 2	Bit 1	Bit 0
MAX_ADC_PRES [7..0]							
R–X							

Bit	Description
Bit 31–0	MAX_ADC_PRES [31..0]: Read only – if the current value of the ADC_PRES register (address 3) exceeds this value, VALID [0] (bit 1) of the STATUS register (address 0) will be cleared. 0xn..n Number type unsigned word

Copyright 2015 by Druck Limited.

3.3.18 Address 74 – MIN_ADC_PRES

Bit 31	Bit 30	Bit 29	Bit 28	Bit 27	Bit 26	Bit 25	Bit 24
MIN_ADC_PRES [31..24]							
R–X							

Bit 23	Bit 22	Bit 21	Bit 20	Bit 19	Bit 18	Bit 17	Bit 16
MIN_ADC_PRES [23..16]							
R–X							

Bit 15	Bit 14	Bit 13	Bit 12	Bit 11	Bit 10	Bit 9	Bit 8
MIN_ADC_PRES [15..8]							
R–X							

Bit 7	Bit 6	Bit 5	Bit 4	Bit 3	Bit 2	Bit 1	Bit 0
MIN_ADC_PRES [7..0]							
R–X							

Bit	Description
Bit 31–0	MIN_ADC_PRES [31..0]: Read only – if the current value of the ADC_PRES register (address 3) is less than this value, VALID [0] (bit 1) of the STATUS register (address 0) will be cleared. 0xn..n Number type unsigned word

Copyright 2015 by Druck Limited.

3.3.19 Address 75 – MAX_ADC_TEMP

Bit 31	Bit 30	Bit 29	Bit 28	Bit 27	Bit 26	Bit 25	Bit 24
MAX_ADC_TEMP [31..24]							
R–X							

Bit 23	Bit 22	Bit 21	Bit 20	Bit 19	Bit 18	Bit 17	Bit 16
MAX_ADC_TEMP [23..16]							
R–X							

Bit 15	Bit 14	Bit 13	Bit 12	Bit 11	Bit 10	Bit 9	Bit 8
MAX_ADC_TEMP [15..8]							
R–X							

Bit 7	Bit 6	Bit 5	Bit 4	Bit 3	Bit 2	Bit 1	Bit 0
MAX_ADC_TEMP [7..0]							
R–X							

Bit	Description
Bit 31–0	MAX_ADC_TEMP [31..0]: Read only – if the current value of the ADC_TEMP register (address 4) exceeds this value, VALID [1] (bit 2) of the STATUS register (address 0) will be cleared. 0xn..n Number type unsigned word

Copyright 2015 by Druck Limited.

3.3.20 Address 76 – MIN_ADC_TEMP

Bit 31	Bit 30	Bit 29	Bit 28	Bit 27	Bit 26	Bit 25	Bit 24
MIN_ADC_TEMP [31..24]							
R–X							

Bit 23	Bit 22	Bit 21	Bit 20	Bit 19	Bit 18	Bit 17	Bit 16
MIN_ADC_TEMP [23..16]							
R–X							

Bit 15	Bit 14	Bit 13	Bit 12	Bit 11	Bit 10	Bit 9	Bit 8
MIN_ADC_TEMP [15..8]							
R–X							

Bit 7	Bit 6	Bit 5	Bit 4	Bit 3	Bit 2	Bit 1	Bit 0
MIN_ADC_TEMP [7..0]							
R–X							

Bit	Description
Bit 31–0	MIN_ADC_TEMP [31..0]: Read only – if the current value of the ADC_TEMP register (address 4) is less than this value, VALID [1] (bit 2) of the STATUS register (address 0) will be cleared. 0xn..n Number type unsigned word

Copyright 2015 by Druck Limited.

3.3.21 Address 77 – SERIAL

Bit 31	Bit 30	Bit 29	Bit 28	Bit 27	Bit 26	Bit 25	Bit 24
SERIAL [31..24]							
R–X							

Bit 23	Bit 22	Bit 21	Bit 20	Bit 19	Bit 18	Bit 17	Bit 16
SERIAL [23..16]							
R–X							

Bit 15	Bit 14	Bit 13	Bit 12	Bit 11	Bit 10	Bit 9	Bit 8
SERIAL [15..8]							
R–X							

Bit 7	Bit 6	Bit 5	Bit 4	Bit 3	Bit 2	Bit 1	Bit 0
SERIAL [7..0]							
R–X							

Bit	Description
Bit 31–0	SERIAL [31..0]: Read only – the sensor manufacturer's serial number. 0xn..n Number type unsigned word

Copyright 2015 by Druck Limited.

3.3.22 Address 78 – CONFIG

Bit 31	Bit 30	Bit 29	Bit 28	Bit 27	Bit 26	Bit 25	Bit 24
Reserved	Reserved	Reserved	Reserved	Reserved	Reserved	Reserved	Reserved
R–0	R–0	R–0	R–0	R–0	R–0	R–0	R–0

Bit 23	Bit 22	Bit 21	Bit 20	Bit 19	Bit 18	Bit 17	Bit 16
Reserved	Reserved	Reserved	Reserved	Reserved	Reserved	Reserved	Reserved
R–0	R–0	R–0	R–0	R–0	R–0	R–0	R–0

Bit 15	Bit 14	Bit 13	Bit 12	Bit 11	Bit 10	Bit 9	Bit 8
ASYNC	STANDBY	TRIGGER	Reserved	Reserved	Reserved	Reserved	Reserved
R–X	R–X	R–X	R–0	R–0	R–0	R–0	R–0

Bit 7	Bit 6	Bit 5	Bit 4	Bit 3	Bit 2	Bit 1	Bit 0
TYPE [7..0]							
R–X							

Bit	Description
Bit 31–16	Reserved, read only
Bit 15	ASYNC: Read only – optional asynchronous serial communication capability. 0b0 Available 0b1 Not available
Bit 14	STANDBY: Read only – low power stand-by mode capability. 0b0 Available 0b1 Not available
Bit 13	TRIGGER: Read only – external wake-up trigger capability. 0b0 Not available 0b1 Available
Bit 12–8	Reserved, read only
Bit 7–0	TYPE [7..0]: Read only – ASCII character defining the sensor type. 0xn..n Number type extended ASCII A Absolute D Differential G Gauge

Copyright 2015 by Druck Limited.

3.3.23 Address 79 – VERSION

Bit 31	Bit 30	Bit 29	Bit 28	Bit 27	Bit 26	Bit 25	Bit 24
FIELD_1 [7..0]							
R–X							

Bit 23	Bit 22	Bit 21	Bit 20	Bit 19	Bit 18	Bit 17	Bit 16
FIELD_2 [7..0]							
R–X							

Bit 15	Bit 14	Bit 13	Bit 12	Bit 11	Bit 10	Bit 9	Bit 8
FIELD_3 [7..0]							
R–X							

Bit 7	Bit 6	Bit 5	Bit 4	Bit 3	Bit 2	Bit 1	Bit 0
FIELD_4 [7..0]							
R–X							

Bit	Description
Bit 31–24	FIELD_1 [7..0]: Read only – first software version field. 0xn..n Number type unsigned byte
Bit 23–16	FIELD_2 [7..0]: Read only – second software version field. 0xn..n Number type unsigned byte
Bit 15–8	FIELD_3 [7..0]: Read only – third software version field. 0xn..n Number type unsigned byte
Bit 7–0	FIELD_4 [7..0]: Read only – fourth software version field. 0xn..n Number type unsigned byte

Copyright 2015 by Druck Limited.

3.3.24 Address 82 – AVERAGE

Bit 31	Bit 30	Bit 29	Bit 28	Bit 27	Bit 26	Bit 25	Bit 24
Unused	Unused	Unused	Unused	Unused	Unused	Unused	Unused
R/W–X	R/W–X	R/W–X	R/W–X	R/W–X	R/W–X	R/W–X	R/W–X

Bit 23	Bit 22	Bit 21	Bit 20	Bit 19	Bit 18	Bit 17	Bit 16
Unused	Unused	Unused	Unused	Unused	Unused	Unused	Unused
R/W–X	R/W–X	R/W–X	R/W–X	R/W–X	R/W–X	R/W–X	R/W–X

Bit 15	Bit 14	Bit 13	Bit 12	Bit 11	Bit 10	Bit 9	Bit 8
P_AVE [7..0]							
R/W–X							

Bit 7	Bit 6	Bit 5	Bit 4	Bit 3	Bit 2	Bit 1	Bit 0
T_AVE [7..0]							
R/W–X							

Bit	Description
Bit 31–16	Unused, read/write
Bit 15–8	P_AVE [7..0]: Read/write – defines the number of individual pressure ADC data samples averaged to produce each pressure and temperature reading. 0xn..n Number type unsigned byte 0 1 sample 1 2 samples 2 4 samples ⋮ ⋮ 7 128 samples 8…255 Invalid value[a]
Bit 7–0	T_AVE [7..0]: Read/write – defines the number of individual temperature ADC data samples averaged to produce each pressure and temperature reading. 0xn..n Number type unsigned byte 0 1 sample 1 2 samples 2 4 samples ⋮ ⋮ 7 128 samples 8…255 Invalid value[a]

a. Values between 8 and 255 are allowed, but the maximum number of samples will remain at 128.

Copyright 2015 by Druck Limited.

3.3.25 Address 83 – PRES_CONV

Bit 31	Bit 30	Bit 29	Bit 28	Bit 27	Bit 26	Bit 25	Bit 24
PRES_CONV [31..24]							
R/W–X							

Bit 23	Bit 22	Bit 21	Bit 20	Bit 19	Bit 18	Bit 17	Bit 16
PRES_CONV [23..16]							
R/W–X							

Bit 15	Bit 14	Bit 13	Bit 12	Bit 11	Bit 10	Bit 9	Bit 8
PRES_CONV [15..8]							
R/W–X							

Bit 7	Bit 6	Bit 5	Bit 4	Bit 3	Bit 2	Bit 1	Bit 0
PRES_CONV [7..0]							
R/W–X							

Bit	Description
Bit 31–0	PRES_CONV [31..0]: Read/write – the value of this register is used to modify the value of the COMP_PRES register (address 1) by converting the value from the manufacturer's pressure units to the user pressure units. 0xn..n Number type float 1.0 Default value

Copyright 2015 by Druck Limited.

3.3.26 Address 84 – PRES_UNIT

Bit 31	Bit 30	Bit 29	Bit 28	Bit 27	Bit 26	Bit 25	Bit 24
Unused	Unused	Unused	Unused	Unused	Unused	Unused	Unused
R/W–X	R/W–X	R/W–X	R/W–X	R/W–X	R/W–X	R/W–X	R/W–X

Bit 23	Bit 22	Bit 21	Bit 20	Bit 19	Bit 18	Bit 17	Bit 16
Unused	Unused	Unused	Unused	Unused	Unused	Unused	Unused
R/W–X	R/W–X	R/W–X	R/W–X	R/W–X	R/W–X	R/W–X	R/W–X

Bit 15	Bit 14	Bit 13	Bit 12	Bit 11	Bit 10	Bit 9	Bit 8
Unused	Unused	Unused	Unused	Unused	Unused	Unused	Unused
R/W–X	R/W–X	R/W–X	R/W–X	R/W–X	R/W–X	R/W–X	R/W–X

Bit 7	Bit 6	Bit 5	Bit 4	Bit 3	Bit 2	Bit 1	Bit 0
PRES_UNIT [7..0]							
R/W–X							

Bit	Description
Bit 31–8	Unused, read/write
Bit 7–0	PRES_UNIT [7..0]: Read/write – defines the manufacturer's pressure unit for the values in the COMP_PRES, MAX_RANGE and MIN_RANGE registers (addresses 1, 70 and 71). May be updated to define the user pressure units created using the PRES_CONV register (address 83).

0xn..n	Number type unsigned byte	
	0	Undefined[a]
	1	mbar
	2	bar
	3	hPa
	4	kPa
	5	MPa
	6	psi
	7	mmH_2O
	8	inH_2O
	9	ftH_2O
	10	mH_2O
	11	mmHg
	12	inHg

Copyright 2015 by Druck Limited.

Bit	Description		
		13	kgf/cm^2
		14	atm
		15…255	Undefined[a]

a. Values 0 and 15 to 255 are allowed but are undefined.

3.3.27 Address 85 – DELAY

Bit 31	Bit 30	Bit 29	Bit 28	Bit 27	Bit 26	Bit 25	Bit 24
Unused	Unused	Unused	Unused	Unused	Unused	Unused	Unused
R/W–X	R/W–X	R/W–X	R/W–X	R/W–X	R/W–X	R/W–X	R/W–X

Bit 23	Bit 22	Bit 21	Bit 20	Bit 19	Bit 18	Bit 17	Bit 16
Unused	Unused	Unused	Unused	Unused	Unused	Unused	Unused
R/W–X	R/W–X	R/W–X	R/W–X	R/W–X	R/W–X	R/W–X	R/W–X

Bit 15	Bit 14	Bit 13	Bit 12	Bit 11	Bit 10	Bit 9	Bit 8
DELAY [15..8]							
R/W–X							

Bit 7	Bit 6	Bit 5	Bit 4	Bit 3	Bit 2	Bit 1	Bit 0
DELAY [7..0]							
R/W–X							

Bit	Description		
Bit 31–16	Unused, read/write		
Bit 15–0	DELAY [15..0]: Read/write – defines the delay in milliseconds between updates of the pressure and temperature readings when the sensor auto-update mode is selected by setting AUTO (bit 8) of the STATUS register (address 0).		
	0xn..n	Number type unsigned integer	
		100	Default value[a]

a. Any value N within the range 0 to 65535 is allowed, but the delay in milliseconds will be (N mod 2000) which restricts the maximum delay to 1999 ms.

Copyright 2015 by Druck Limited.

3.3.28 Address 86 – SPEC_DWG

Bit 31	Bit 30	Bit 29	Bit 28	Bit 27	Bit 26	Bit 25	Bit 24
SPEC_DWG [31..24]							
R–X							

Bit 23	Bit 22	Bit 21	Bit 20	Bit 19	Bit 18	Bit 17	Bit 16
SPEC_DWG [23..16]							
R–X							

Bit 15	Bit 14	Bit 13	Bit 12	Bit 11	Bit 10	Bit 9	Bit 8
SPEC_DWG [15..8]							
R–X							

Bit 7	Bit 6	Bit 5	Bit 4	Bit 3	Bit 2	Bit 1	Bit 0
SPEC_DWG [7..0]							
R–X							

Bit	Description
Bit 31–0	SPEC_DWG [31..0]: Read only – the 4-digit specification drawing number of the sensor. 0xn..n Number type unsigned word

Copyright 2015 by Druck Limited.

3.3.29 Address 87 – TARE_VALUE

Bit 31	Bit 30	Bit 29	Bit 28	Bit 27	Bit 26	Bit 25	Bit 24
TARE_VALUE [31..24]							
R/W–X							

Bit 23	Bit 22	Bit 21	Bit 20	Bit 19	Bit 18	Bit 17	Bit 16
TARE_VALUE [23..16]							
R/W–X							

Bit 15	Bit 14	Bit 13	Bit 12	Bit 11	Bit 10	Bit 9	Bit 8
TARE_VALUE [15..8]							
R/W–X							

Bit 7	Bit 6	Bit 5	Bit 4	Bit 3	Bit 2	Bit 1	Bit 0
TARE_VALUE [7..0]							
R/W–X							

Bit	Description
Bit 31–0	TARE_VALUE [31..0]: Read/write – the value of this register is used to modify the value of the COMP_PRES register (address 1) when the sensor tare mode is selected by setting TARE (bit 12) of the STATUS register (address 0). 0xn..n Number type float

Copyright 2015 by Druck Limited.

3.3.30 Addresses 128–157 – Pressure Coefficients

Bit 31	Bit 30	Bit 29	Bit 28	Bit 27	Bit 26	Bit 25	Bit 24
$K_{P(IJ)}$ [31..24]							
R/W–X							

Bit 23	Bit 22	Bit 21	Bit 20	Bit 19	Bit 18	Bit 17	Bit 16
$K_{P(IJ)}$ [23..16]							
R/W–X							

Bit 15	Bit 14	Bit 13	Bit 12	Bit 11	Bit 10	Bit 9	Bit 8
$K_{P(IJ)}$ [15..8]							
R/W–X							

Bit 7	Bit 6	Bit 5	Bit 4	Bit 3	Bit 2	Bit 1	Bit 0
$K_{P(IJ)}$ [7..0]							
R/W–X							

Bit	Description
Bit 31–0	$K_{P(IJ)}$ [31..0]: Read only – the pressure coefficient registers contain a total of (I+1)×(J+1) contiguous pressure coefficients where I and J represent the values of the PP_FIT [7..0] and PT_FIT [7..0] bits of the COEF_DIM register (address 67). 0xn..n Number type float

Copyright 2015 by Druck Limited.

3.3.31 Addresses 158–187 – Temperature Coefficients

Bit 31	Bit 30	Bit 29	Bit 28	Bit 27	Bit 26	Bit 25	Bit 24
$K_{T(IJ)}$ [31..24]							
R/W–X							

Bit 23	Bit 22	Bit 21	Bit 20	Bit 19	Bit 18	Bit 17	Bit 16
$K_{T(IJ)}$ [23..16]							
R/W–X							

Bit 15	Bit 14	Bit 13	Bit 12	Bit 11	Bit 10	Bit 9	Bit 8
$K_{T(IJ)}$ [15..8]							
R/W–X							

Bit 7	Bit 6	Bit 5	Bit 4	Bit 3	Bit 2	Bit 1	Bit 0
$K_{T(IJ)}$ [7..0]							
R/W–X							

Bit	Description
Bit 31–0	$K_{T(IJ)}$ [31..0]: Read only – the temperature coefficient registers contain a total of (I+1)×(J+1) contiguous temperature coefficients where I and J represent the values of the TP_FIT [7..0] and TT_FIT [7..0] bits of the COEF_DIM register (address 67). 0xn..n Number type float

4. Operational Description

4.1 Operational States

The basic operational states of the DPS5000 sensor are shown in Figure 6.

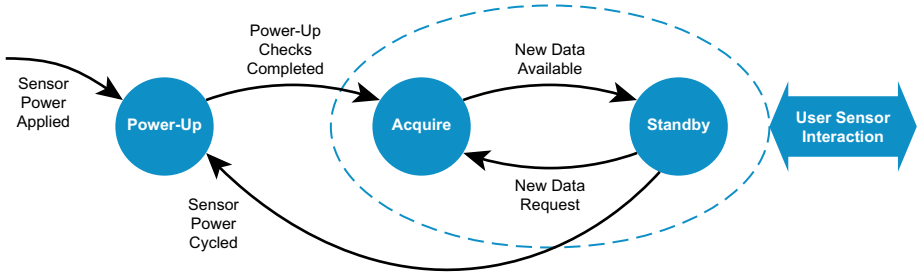

Figure 6: Operational States

When power is first applied, the sensor enters the power-up state. Whilst in this state the sensor is unresponsive to I²C-bus activity and user interaction with the sensor is not possible. After the power-up checks have been completed the sensor automatically enters the acquire state in which the sensor obtains pressure and temperature data. User interaction with the sensor is now possible but the pressure and temperature data will not be available until after the sensor

Copyright 2015 by Druck Limited.

acquisition time and the sensor enters the stand-by state. The sensor will remain in the standby state until either:

a. The sensor power is cycled and the sensor returns to the power-up state.

b. User interaction results in a new data request being internally generated and the sensor re-enters the acquire state.

Figure 7 shows the legend used within this section to describe the user interactions with the sensor.

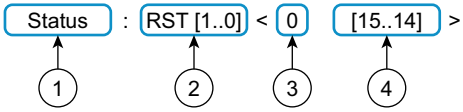

1 Register name.
2 Register bit field.
3 Register address.
4 Register bit position.

Figure 7: Interaction Legend

4.2 Reading the Pressure and Temperature

The DPS5000 sensors directly provide compensated pressure and temperature data via the COMP_PRES and COMP_TEMP registers avoiding the need for the user to undertake any additional calculations. Unless modified by the user, see Section 4.4.3, the unit of pressure is that used by the manufacturer during calibration of the sensor and defined in the PRES_UNIT register. The unit of temperature is always °C.

The following steps should be used to read the pressure and temperature data:

1. Check the status of the new data available flag:

   Read STATUS: CONV <0 [0]> {0b1 = new data available}

2. Check that the data is valid:

   Read STATUS: VALID [1..0] <0 [2..1]> {0b11 = new data valid}

3. Get the compensated pressure data:

   Read COMP_PRES: COMP_PRES [31..0] <1 [31..0]>

4. Get the unit of pressure information (optional):

   Read PRES_UNIT: PRES_UNIT [7..0] <84 [7..0]>

5. Get the compensated temperature data:

   Read COMP_TEMP: COMP_TEMP [31..0] <2 [31..0]>

4.3 Updating the Pressure and Temperature

When the sensor enters the standby state for the first time, the new data available flag, CONV (bit 0) of the STATUS register (address 0), will be set to indicate that pressure and temperature data is available. This data will not be updated until a new data request is generated, which can be achieved either manually or automatically.

4.3.1 Manual Update

A new data request is manually generated by the user:

1. Initiate a data update:

   Write 0b1 to STATUS: CONV <0 [0]>

   Note: Writing 0b1 to STATUS: CONV automatically clears the new data available flag. It is set back to 0b1 when the updated data is available which can then be read using the steps given in Section 4.2.

Copyright 2015 by Druck Limited.

4.3.2 Automatic Update

The user initiates the automatic generation of new data requests at a pre-defined interval:

1. Clear the new data available flag:

   Write 0b0 to STATUS: CONV <0 [0]>

2. Set the auto-update mode bit:

   Write 0b1 to STATUS: AUTO <0 [8]>

The new data available flag is set to 0b1 when the updated data is available which can then be read using the steps given in Section 4.2. When in the auto-update mode, reading the COMP_PRES, COMP_TEMP, ADC_PRES, ADC_TEMP, MVOLT_PRES or MVOLT_TEMP register (addresses 1, 2, 3, 4, 6 and 7 respectively) will automatically clear the new data available flag.

As supplied, the auto-update period is set to the default value of 100 ms but it may be changed by the user, see Section 4.4.3.

4.4 Updating the Sensor Configuration Data Registers

4.4.1 User Modifiable Registers

The configuration data registers provide information for the user and allow the user to change the functionality of the sensor. Table 8 lists the configuration data registers that can be modified by the user.

Table 8: User Modifiable Registers

Address	Register	See Section(s)
66	I2C_ADDR	4.4.2
68	GAIN_ADJ	4.4.8
69	OFFSET_ADJ	4.4.8
72	CAL_DATE	4.4.8
82	AVERAGE	4.4.6
83	PRES_CONV	4.4.4, 4.4.8
84	PRES_UNIT	4.4.4
85	DELAY	4.4.3
87	TARE_VALUE	4.4.5

With the exception of the I2C_ADDR and DELAY registers, any change to a register value takes immediate effect. The changes made to a register value may be temporary or permanent:

Change Type	Description
Temporary	The modified register value will remain valid until the either the sensor is reset via the status register or the sensor power is cycled.
Permanent	The modified register value is written to non-volatile memory and then remains valid even if the sensor is reset via the status register or the sensor power is cycled.

The configuration data registers are normally locked to prevent inadvertent changes from being made. The following steps are required unlock the registers:

1. Enable changes to the configuration data registers:

Copyright 2015 by Druck Limited.

Write 4118 to ACCESS: ACCESS [31..0] <5 [31..0]>

2. Check the configuration data write access status (optional):

   Read STATUS: WENB <0 [3]> {0b1 = configuration data write enabled}

   Note: The configuration registers may then be modified by writing the new user values to the appropriate registers. If the new user values are to be permanent, the following step must be performed.

3. Save the register data to non-volatile memory:

   Write 0b1 to STATUS: WRITE <0 [5]>

   Finally, the configuration data registers should be re-locked to prevent further changes from being made.

4. Disable changes to the configuration data registers:

   Write 0 to ACCESS: ACCESS [31..0] <5 [31..0]>

4.4.2 Modifying the I²C-bus Address

All DPS5000 sensors are supplied with the I²C-bus address set to the default value of 2. The I²C-bus address may be changed by the user by writing the desired new address to the I2C_ADDR register[1]. Allowable address values are 1 to 127.

For example, to change the I²C-bus address to 64:

1. Unlock the configuration data registers as described in Section 4.4.1.
2. Update the I²C-bus address.

   Write 64 to I2C_ADDR: ADDR [7..0] <66 [7..0]>

3. Save the new I²C-bus address to non-volatile memory and re-lock the configuration data registers as described in Section 4.4.1.
4. Reset the sensor. Either power cycle the sensor or:

   Write 0b10 to STATUS: RESET [1..0] <0 [15..14]>

The sensor will now respond to the new I²C-bus address.

4.4.3 Changing the Auto-Update Period

INFORMATION **The automatic update period should be chosen with care to avoid new updates being requested before the data from the preceding request is available. The update interval should be set to be longer than the sensor acquisition time, see Section 4.4.6. Failure to observe this precaution will result in the queue error flag (STATUS: QERR <0 [10]>) being set and may result in invalid pressure and temperature data.**

All DPS5000 sensors are supplied with the auto-update period set to the default value of 100 ms. The auto-update period may be changed by the user by writing the desired new period to the DELAY register[2]. The allowable period is between 1 and 1999 ms in 1 ms increments.

For example, to change the auto-update period to 1.512 s:

1. Exit the automatic update mode (if applicable):

   Write 0b0 to STATUS: AUTO <0 [8]>

2. Unlock the configuration data registers as described in Section 4.4.1.

---

1. A change of the sensor I²C-bus address will not come into effect until the I2C_ADDR register has been modified, copied to non-volatile memory and the sensor is reset via the status register or by cycling the sensor power.
2. A change to the DELAY register will not come into effect whilst the sensor is in the auto-update mode. Exit then re-enter the auto-update mode for the change to be applied.

Copyright 2015 by Druck Limited.

3. Update the auto-update period:

   Write 1512 to DELAY: DELAY [15..0] <85 [15..0]>
4. Save the new auto-update period to non-volatile memory if required and re-lock the configuration data registers as described in Section 4.4.1.
5. Re-enter the automatic update mode (if applicable):

   Write 0b1 to STATUS: AUTO <0 [8]>

4.4.4 Changing the Unit of Pressure

INFORMATION Changing the PRES_CONV and PRES_UNIT registers have no effect on the MAX_RANGE and MIN_RANGE register values. The unit of pressure for these values will remain in the supplied calibrated unit of pressure.

The DPS5000 sensors can be supplied calibrated in a variety of pressure units. As supplied, the pressure value given in the COMP_PRES register and the sensor upper and lower pressure limits defined in the MAX_RANGE and MIN_RANGE registers will all be in the calibrated unit of pressure. However, the user may change the unit of pressure of the COMP_PRES register to an alternative unit of pressure.

For example, if the sensor is supplied calibrated in bar and the required unit of pressure for the pressure readings is psi:

1. Unlock the configuration data registers as described in Section 4.4.1.
2. Determine the appropriate conversion factor from Appendix A and update the pressure unit conversion factor value.

   Write 14.50377 to PRES_CONV: PRES_CONV [31..0] <83 [31..0]>
3. Save the new pressure unit conversion factor value to non-volatile memory if required and re-lock the configuration data registers as described in Section 4.4.1.

   The user may also change the value of the pressure unit code held in the PRES_UNIT register to the alternative unit of pressure code.

   For example, if the unit of pressure for the pressure reading has been changed to psi then add the following step between steps 2 and 3 above.
4. Determine the appropriate unit of conversion code from Appendix A and update the unit of pressure code value.

   Write 6 to PRES_UNIT: PRES_UNIT [7..0] <84 [7..0]>

4.4.5 Reading Relative Pressure

The DPS5000 sensors can be configured to provide pressure measurements relative to a pressure offset such that:

Relative Pressure = True Pressure – Pressure Offset

The relative pressure value is available via the COMP_PRES register when the sensor tare mode is selected. The pressure offset value is held in the TARE_VALUE register. The value can be either a user defined value or set to the current value of the COMP_PRES register.

For example, to set the pressure offset to 1.000000:

1. Unlock the configuration data registers as described in Section 4.4.1.
2. Update the pressure offset value:

   Write 1.000000 to TARE_VALUE: TARE_VALUE [31..0] <87 [31..0]>
3. Save the new pressure offset value to non-volatile memory if required and re-lock the configuration data registers as described in Section 4.4.1.

   Alternatively, to set the pressure offset to the current value of the COMP_PRES register:
4. Copy the current COMP_PRES register value to the TARE_VALUE register.

Copyright 2015 by Druck Limited.

Write 0b1 to STATUS: SET_TARE <0 [11]>

To enable reading relative pressure:

5. Enable the sensor tare mode:

   Write 0b1 to STATUS: TARE <0 [12]>

4.4.6 Pressure and Temperature SNR

CAUTION If the sensor automatic update mode is used, see Section 4.4.3, ensure the auto-update period, see Section 4.4.3, is set to be longer than the modified acquisition time. Failure to observe this precaution will result in the queue error flag (STATUS: QERR <0 [10]>) being set and may result in invalid pressure and temperature data.

The DPS5000 sensors provide compensated pressure and temperature readings with a high SNR. However, for very low noise applications, the user can modify the contents of the AVERAGE register to increase the SNR of either or both readings at the expense of the sensor acquisition time.

The AVERAGE register has two bit fields, P_AVE [7..0] and T_AVE [7..0] that can be used to adjust the SNR of the pressure and temperature reading respectively. Typically the sensors are supplied with P_AVE [7..0] set to 2 and T_AVE [7..0] set to 1. Modifying these values will typically change the RMS amplitude of the corresponding reading noise by the correction factor shown in Figure 8.

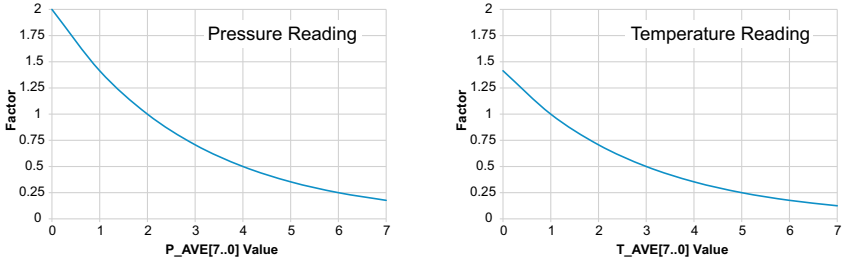

Figure 8: Noise Level Correction Factors

If the values of the AVERAGE register P_AVE [7..0] and T_AVE [7..0] bit fields are P and T respectively, then the typical sensor acquisition time can be found using the formula:

$t_A \approx 2.12\ (2^P + 2^T) + 10.60$ ms[1]

For example, if the sensor has P_AVE [7..0] set to 2 and T_AVE [7..0] set to 1 and it is required to reduce the RMS amplitude of the pressure reading noise by a factor of 4 and the temperature reading noise by a factor of 2, then using Figure 8, the new values for P_AVE [7..0] and T_AVE [7..0] will be 6 and 3 respectively.

1. Unlock the configuration data registers as described in Section 4.4.1.
2. Update the number of pressure samples.

   Write 6 to AVERAGE: P_AVE [7..0] <82 [15..8]>
3. Update the number of temperature samples.

   Write 3 to AVERAGE: T_AVE [7..0] <82 [7..0]>
4. Save the new sample values to non-volatile memory if required and re-lock the configuration data registers as described in Section 4.4.1.

1. This formula excludes the time taken to initiate a new data request when the sensor is used in the manual mode as it is dependent upon the I²C-bus clock speed and the message length.

Copyright 2015 by Druck Limited.

As a result of the above changes, the sensor acquisition time will typically increase from 23 ms to 163 ms.

4.4.7 Maximizing the Update Rate

For applications that require the DPS5000 sensor acquisition time to be faster than is achievable by adjusting the sensor SNR, see Section 4.4.6, the sensor provides an interleave mode. This mode is only intended to be used when both the P_AVE [7..0] and T_AVE [7..0] bit fields of the AVERAGE register are set to 0 and should be used with caution. It provides a sensor acquisition time of typically 10 ms permitting a pressure and temperature measurement refresh rate of up to 100 Hz to be achieved.

To use the interleave mode:

1. Set the P_AVE [7..0] and T_AVE [7..0] bit fields of the AVERAGE register to 0 using the steps described in Section 4.4.6.
2. Set the interleave mode bit.

   Write 0b1 to STATUS: INTRDG <0: [9]>

4.4.8 Pressure Re-calibration

The user may perform a two-point pressure re-calibration on the DPS5000 sensors by adjusting the zero and span settings of the sensor. The following steps describe the procedure:

1. Apply a known pressure, P_{A1}, ideally ≤ 10% of the sensor's full-scale pressure, and record the measured pressure, P_{M1}[1].

   P_{M1} = Read COMP_PRES: COMP_PRES [31..0] <1 [31..0]>
2. Apply a second known pressure, P_{A2}, ideally ≥ 90% of the sensor's full-scale pressure, and record the measured pressure, P_{M2}[1].

   P_{M2} = Read COMP_PRES: COMP_PRES [31..0] <1 [31..0]>
3. Read and record the current values G, O and C of the following configuration data registers:

   G = Read GAIN_ADJ: GAIN_ADJ [31..0] <68 [31..0]>

   O = Read OFFSET_ADJ: OFFSET_ADJ [31..0] <69 [31..0]>

   C = Read PRES_CONV: PRES_CONV [31..0] <83 [31..0]>
4. Calculate the values S, G′ and O′ using the following formulae:

   $S = (P_{M2} – P_{M1}) / (P_{A2} – P_{A1})$

   $G' = G / S$

   $O' = (S \times P_{A1} + O \times C – P_{M1}) / (S \times C)$
5. Unlock the configuration data registers as described in Section 4.4.1.
6. Update the following configuration registers:

   Write the value of G′ to GAIN_ADJ: GAIN_ADJ [31..0] <68 [31..0]>

   Write the value of O′ to OFFSET_ADJ: OFFSET_ADJ [31..0] <69 [31..0]>
7. Save the new calibration zero and span factor values to non-volatile memory if required and re-lock the configuration data registers as described in Section 4.4.1.

   The user may also record the date of re-calibration by modifying the date fields of CAL_DATE register.

   For example, to change the calibration date to 16th April 2015 then add the following step between steps 6 and 7 above.

---

1. To minimize the effects of noise it is recommended that the values P_{M1} and P_{M2} used are the average of several measurements.

Copyright 2015 by Druck Limited.

8. Update the date field values:
   Write 2015 to CAL_DATE: YEAR [15..0] <72 [31..16]>
   Write 4 to CAL_DATE: MONTH [7..0] <72 [15..8]>
   Write 16 to CAL_DATE: DAY [7..0] <72 [7..0]>

5. Maintenance

WARNING High pressures and extremes of temperature are dangerous. Be careful when working on components of systems where high pressures and high or low temperatures are present. Use all applicable protection measures and observe all safety precautions.

5.1 Cleaning

CAUTION Do not use cleaning agents, solvents or high-pressure gas to remove dirt as these may damage the sensor.

The external version of the DPS5000 sensors may be periodically cleaned if required using a lint free cloth and a soft brush. If necessary, use a weak detergent solution to moisten the cloth. Allow the sensor to dry before re-use.

5.2 Adjustment

The DPS5000 sensors are supplied fully calibrated by the manufacturer. When it is necessary to re-calibrate the sensor, the procedure given in Section 4.4.8 should be followed. The minimum recommended re-calibration interval is once per year and should be undertaken using a pressure source with a measurement accuracy of at least ± 0.01 % of reading.

Note: Druck can provide a calibration service that is traceable to international standards.

5.3 Repair

The DPS5000 sensors contain no user serviceable items. For any repairs, return the sensor to the manufacturer or an approved service agent.

5.4 Disposal

Disposal of the DPS5000 sensor must be in accordance with the local statutory regulations. Do not dispose of with regular household refuse.

Copyright 2015 by Druck Limited.

Appendix A. Unit of Pressure Conversion Factors

The following tables give the value necessary to convert from the calibrated unit of pressure to the required unit of pressure.

Calibrated Unit of Pressure		Required Unit of Pressure			
		mbar	bar	hPa	kPa
	Code	1	2	3	4
mbar	1	**1**	0.001	1	0.1
bar	2	1000	**1**	1000	100
hPa	3	1	0.001	**1**	0.1
kPa	4	10	0.01	10	**1**
MPa	5	10000	10	10000	1000
psi	6	68.94757	0.06894757	68.94757	6.894757
mmH_2O	7	0.0980665	9.80665E-05	0.0980665	0.00980665
inH_2O	8	2.490889	0.002490889	2.490889	0.2490889
ftH_2O	9	29.89067	0.02989067	29.89067	2.989067
mH_2O	10	98.0665	0.0980665	98.0665	9.80665
mmHg	11	1.333224	0.001333224	1.333224	0.1333224
inHg	12	33.86389	0.03386389	33.86389	3.386389
kgf/cm^2	13	980.665	0.980665	980.665	98.0665
atm	14	1013.25	1.01325	1013.25	101.325

Calibrated Unit of Pressure		Required Unit of Pressure			
		MPa	psi	mmH_2O	inH_2O
	Code	5	6	7	8
mbar	1	0.0001	0.01450377	10.19716	0.4014631
bar	2	0.1	14.50377	10197.16	401.4631
hPa	3	0.0001	0.01450377	10.19716	0.4014631
kPa	4	0.001	0.1450377	101.9716	4.014631
MPa	5	**1**	145.0377	101971.6	4014.631
psi	6	0.006894757	**1**	703.0696	27.6799
mmH_2O	7	9.80665E-06	0.001422334	**1**	0.03937008
inH_2O	8	0.000249089	0.03612729	25.4	**1**
ftH_2O	9	0.002989067	0.4335275	304.8	12
mH_2O	10	0.00980665	1.422334	1000	39.37008
mmHg	11	0.000133322	0.01933678	13.5951	0.5352402
inHg	12	0.003386389	0.4911542	345.3155	13.5951
kgf/cm^2	13	0.0980665	14.22334	10000	393.7008
atm	14	0.101325	14.69595	10332.28	406.7825

Copyright 2015 by Druck Limited.

Calibrated Unit of Pressure		Required Unit of Pressure			
		ftH_2O	mH_2O	mmHg	inHg
	Code	9	10	11	12
mbar	1	0.03345526	0.01019716	0.7500616	0.02952998
bar	2	33.45526	10.19716	750.0616	29.52998
hPa	3	0.03345526	0.01019716	0.7500616	0.02952998
kPa	4	0.3345526	0.1019716	7.500616	0.2952998
MPa	5	334.5526	101.9716	7500.616	295.2998
psi	6	2.306659	0.7030696	51.71492	2.036021
mmH_2O	7	0.00328084	0.001	0.07355591	0.002895902
inH_2O	8	0.08333333	0.0254	1.86832	0.07355591
ftH_2O	9	**1**	0.3048	22.41984	0.8826709
mH_2O	10	3.28084	**1**	73.55591	2.895902
mmHg	11	0.04460335	0.0135951	**1**	0.03937008
inHg	12	1.132925	0.3453155	25.4	**1**
kgf/cm^2	13	32.8084	10	735.5591	28.95902
atm	14	33.89854	10.33228	760	29.92126

Calibrated Unit of Pressure		Required Unit of Pressure	
		kgf/cm^2	atm
	Code	13	14
mbar	1	0.001019716	0.000986923
bar	2	1.019716	0.9869232
hPa	3	0.001019716	0.000986923
kPa	4	0.01019716	0.009869232
MPa	5	10.19716	9.869232
psi	6	0.07030696	0.06804596
mmH_2O	7	0.0001	9.67841E-05
inH_2O	8	0.00254	0.002458316
ftH_2O	9	0.03048	0.02949979
mH_2O	10	0.1	0.0967841
mmHg	11	0.00135951	0.00131579
inHg	12	0.03453155	0.03342105
kgf/cm^2	13	**1**	0.967841
atm	14	1.033228	**1**

The conversion factors for the units mmH_2O, inH_2O, ftH_2O and mH_2O are for water at 4°C. The conversion factors for the units mmHg and inHg are for Mercury at 0°C.

Copyright 2015 by Druck Limited.

Office Locations

druck.com/contact

Services and Support Locations

druck.com/service

Copyright 2015 by Druck Limited. ALL RIGHTS RESERVED. This material contains one or more registered trademarks of Druck Limited and/or its subsidiaries. All third-party products and company names are trademarks of their respective holders.

K0582 Revision E | English

druck.com

ICS Schneider Messtechnik GmbH
Briesestraße 59
D-16562 Hohen Neuendorf / OT Bergfelde

Tel.: 03303 / 50 40 66
Fax.: 03303 / 50 40 68

info@ics-schneider.de
www.ics-schneider.de